TAJFUN®

PRODUCT CATALOGUE

Firewood Processors – RCA
Logging Winches
Hydraulic Tractor Crane – DOT
Forestry Trailers – GAP
Tajfun Forestry Information System

TRACE LEAVING TECHNOLOGY

The complete handling of wood with Tajfun

Through intensive development, we have chosen our path and directed our vision to become the leading producer of forestry mechanization in the world.

Our primary products include single and double drum logging winches, firewood processors, hydraulic tractor crane, suspension cranes, forestry trailers, Tajfun forestry information system and forestry accessories. Our goal is to create powerful, user-friendly and safe forestry machines, supported by a forestry information system to facilitate work in the forest. We provide complete and competitive solutions to meet the needs of the forestry industry.

We completely test each individual machine for full functionality, ensuring we meet significant international quality and safety standards.

CONTENT

FIREWOOD PROCESSORS – RCA 2–25

General content 2–11
Splitting Wedges 11
Technical data 12,13
RCA accessories 14–25

LOGGING WINCHES 26–45

General content 26–29
EGV 65 AHK ZS 31
Double Drum Winch DGV 2X55 AHK 31
Logging Winch VIP PRO 90 32–34
Technical data 36–41
Logging winch accessories 40–47

HYDRAULIC TRACTOR CRANES – DOT 48–63

General content 48–51
Technical data 52–55
DOT equipment and accessories 60–63
Winches for DOT cranes 64
Grapples 66, 67

FORESTRY TRAILERS – GAP 68–79

General content 68–71
Technical data 72, 73
GAP accessories 74–79

TAJFUN FORESTRY INFORMATION SYSTEM 80–83

Electronic Digital Caliper Tajfun BOB 800 82
Software Tajfun MX BOB 83

Firewood processors are also available with an integrated bio-oil.

TAJFUN FIREWOOD PROCESSORS - RCA

High efficiency, great time saving...

Tajfun Firewood Processors, established under the brand name RCA, are essential forestry accessories for processing of wood biomass – logs into firewood. Tajfun product development is constantly directed towards optimal and simple operation for machine operators. You will choose and enjoy Tajfun Firewood processors because they excel in:

- energy efficiency,
- simple and fast set up and take down,
- high capacity,
- compact and rugged construction,
- simple user friendly controls.

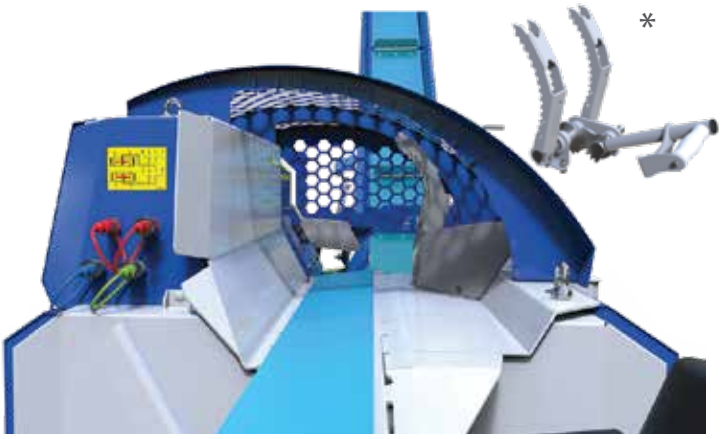

SMOOTH AND EFFECTIVE CUTTING OF LOGS

Before the Hydraulic Log Holder there is a Guide Lean that guides the log and prevents it from hitting the log holder. The Hydraulic Log Holder is used to fix the log and prevent it from spinning and turning.
* Log Holder at RCA 380 (E) is controled by a handle.

MAXIMUM SAFETY

Main Cover - safety switch ensures maximum safety by disengaging all major functions when cover is open.

OPTIMAL PLACEMENT OF CUT PIECES INTO THE SPLITTING CHUTE

is ensured by Swinging Lap/s that remain/s in the horizontal position during cutting. Once the log is cut, the lap/s open and the log falls into the splitting chute. This is important to prevent the jamming of the last and usually short round.

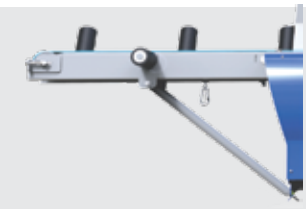

The Foldable Infeed Conveyor with a durable feeding belt (length 2 m / 6.5', width 20 cm / 7.8'' or 25 cm / 9.5'' on RCA 480 JOY and
RCA PRO 500).

Adjustable hydraulic movable limiter. It comes closer for about 4 cm / 1.6'' every time the log is forwarding. It returns to its starting position when log forwarding stops. Therefore the cut piece falls safely into the splitting chute.

Splitting Cylinder. Two splitting speeds (only at (RCA 380 (E), RCA 400 JOY, RCA 480 JOY, RCA PRO 500).- splitting for softer wood, slower splitting for harder wood. The speed automatically switches over according to the hardness of the wood.

Lattice for sawdust and smaller splinter removal is located between the splitting wedge and the discharge conveyor.

SIMPLE TRANSPORT

the feeding and the discharge conveyor are leant against and fixed upon the machine. The machine is clamped to the tractor using a three-point system.

RELIABLE AND FAST SAWING

High-efficiency OREGON chainsaw. Lubrication pump for optimum chain lubrication at RCA PRO 500. From now on, the standard equipment of the RCA PRO 500 also includes the Cannonbar, with which it is possible to cut between 400 and 500 tons of wood.

Hydraulic Outputs for Log Loader or Live Deck; standard at all RCA machines, only at RCA 330 *FUN* available optional and only with the Control SET for DM / RN. (Article number: 254327)

Oil Cooler with thermostat – Standard at RCA 400 JOY, RCA 480 JOY and RCA PRO 500, optional at RCA 330 JOY, RCA 330 JOY GM and RCA 380.

Tool Box comes as standard at RCA 480 JOY and RCA PRO 500.

Electro Hydraulically Controlled Clutch; automatically stops and starts the cutting chain. Standard at RCA 400 JOY, RCA 480 JOY.

RCA OPERATION

SAWBAR ACTIVATION HANDLE

RCA 380 (E)

Mechanical control with activation handle enables infeed, sawing and splitting. Splitting wedge height is set according to log diameter, using the other operating handle.

MINI JOYSTICK

RCA 330 *FUN*

Ergonomic, safe and user friendly operation of main machine functions (infeed in/out, sawing, splitting). Splitting wedge height is set according to log diameter, using the other operating handle (mechanical).

JOYSTICK

RCA 330 JOY, RCA 330 JOY GM, RCA 400 JOY, RCA 480 JOY, RCA PRO 500

ergonomic, safe and user friendly operation of main machine functions (infeed in/out, sawing, splitting, lifting/lowering of the wedge…).

DATA ACQUISITION AND PROCESSING WITH A CONTROLLER - DATA ON DISPLAY

RCA PRO 500

The display presents the following parameters of the machine:

- RPM of the P.T.O. drive shaft and of the saw drive,
- working hours,
- working pressures,
- oil temperature,
- machine output [m^3] Display reads: total output,
- interval output and
- average machine output,
- alarms.

AUTOMATIC LEVELING OF THE WEDGE

RCA PRO 500
The wedge height adapts automatically to the log diameter (measurement performed during the sawing process). The wedge height can as well be adjusted manually (using the switch on the joystick).

Replacing the wedge - two lower positions of the mechanism:
1. The wedge is protected in the mechanism.
2. The mechanism is fully lowered and the wedge can be detached.

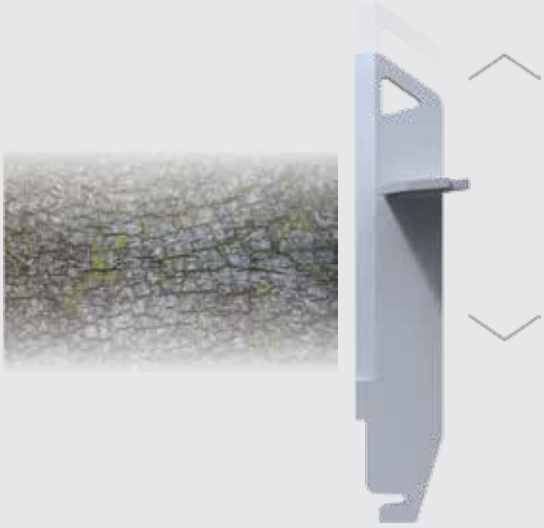

WARNING LIGHT

indicating the correct RPM of the P.T.O. shaft.
RCA PRO 500

- Switched off – RPM too low
- Glowing – RPM correct
- Flashing – RPM too high

FAST SPLIT FOR GREATER PRODUCTIVITY!

Fast split – Splitting Cylinder completes only part of the path. The cycle time shortens, productivity increases. For splitting wood with a length of 33 cm / 12" 31/32 or less.

Full split – Splitting Cylinder completes the entire path.
For splitting wood with a length of 34 cm / 13" 25/32 or more.

DISCHARGE CONVEYORS

Description	Length	Belt Width	Weight	Belt Speed	Telescopic cylinder
TT 320	2000 mm / 6.5'	300 mm / 12"	82 kg / 180 lbs	/	Onestage
TT 340	4000 mm / 13'	300 mm / 12"	154 kg / 339 lbs		Twostage
TT 404	4000 mm / 13'	430 mm / 17"	180 kg / 396 lbs		Twostage
TT 404 R	4000 mm / 13'	430 mm / 17"	180 kg / 396 lbs	Continuous Speed Control; 0–0.8 m/s / 0–31.5"/s	Twostage, double-acting
TT 504	5000 mm / 16.5'	430 mm / 17"	210 kg / 462 lbs		Twostage
TT 504 R	5000 mm / 16.5'	430 mm / 17"	210 kg / 462 lbs		Twostage, double-acting
TT 510 S	5000 mm / 16.5'	580 mm / 23"	248 kg / 546 lbs		Twostage, double-acting

MANUAL WINCH

for changing the inclination of the Discharge Conveyor.

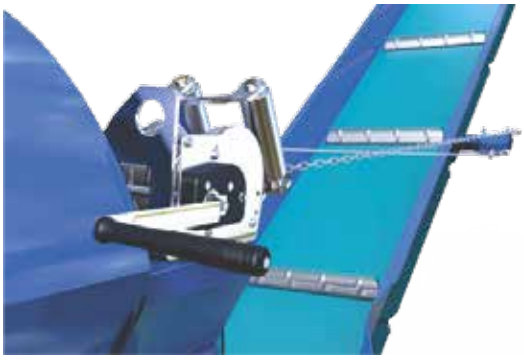

HYDRAULIC WINCH

with brake for adjusting the Discharge Conveyor inclination. With help of the operating handle we can adjust the inclination and also run the moving of the Discharge Conveyor to the left and to the right.

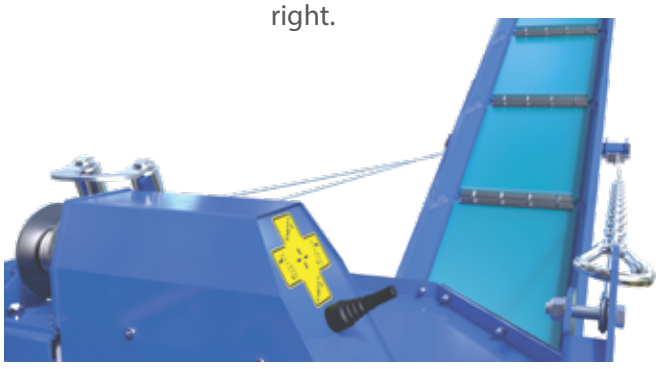

DOUBLE-ACTING CYLINDER

which enables hydraulic raising of the discharge conveyor in the working or transport position.

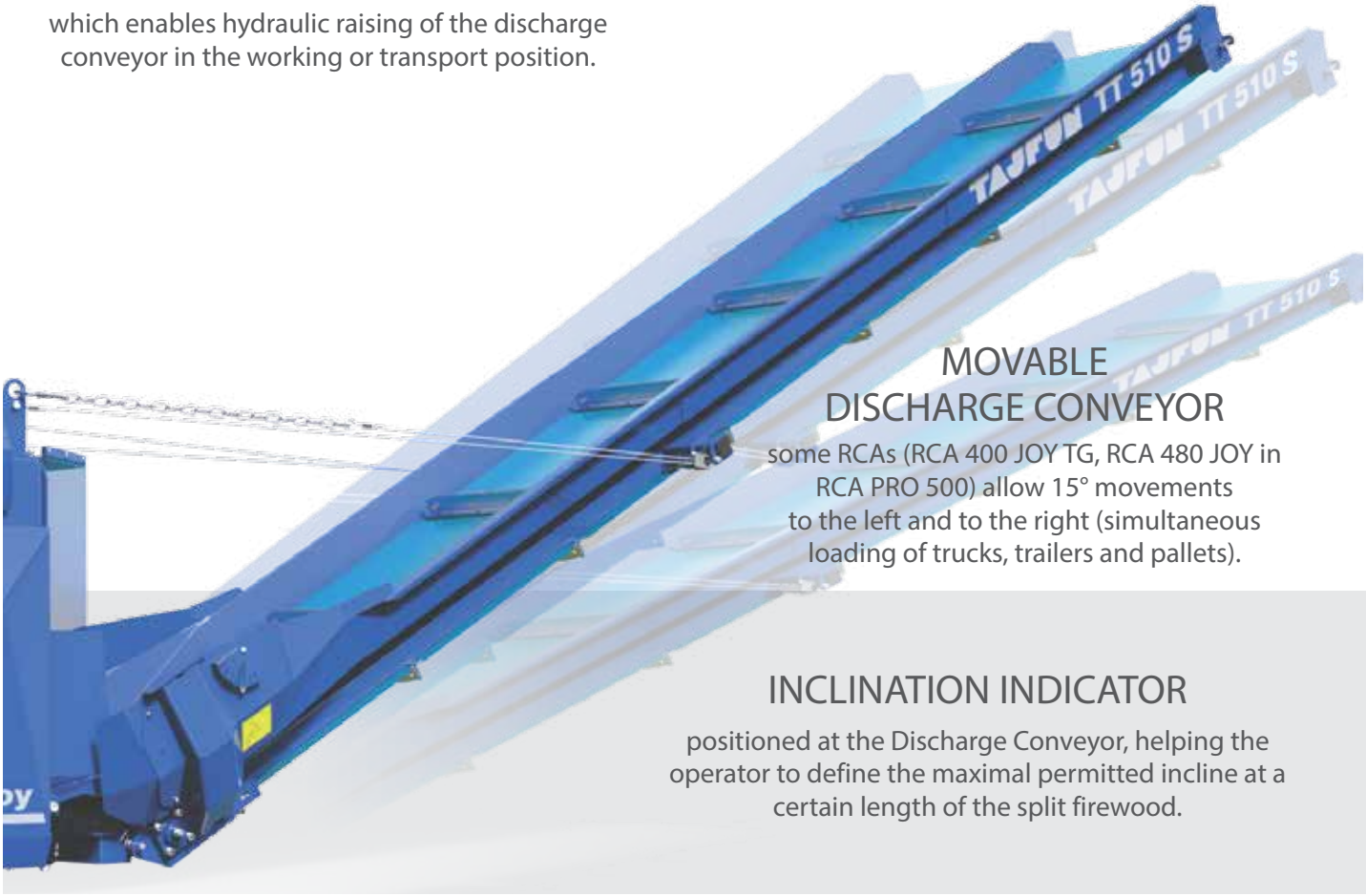

MOVABLE DISCHARGE CONVEYOR

some RCAs (RCA 400 JOY TG, RCA 480 JOY in RCA PRO 500) allow 15° movements to the left and to the right (simultaneous loading of trucks, trailers and pallets).

INCLINATION INDICATOR

positioned at the Discharge Conveyor, helping the operator to define the maximal permitted incline at a certain length of the split firewood.

Belt tensioning	15° movements to the left and right enabled	Compatibility (bold font - as standard equipment on RCA)
Mechanic	/	**RCA 330 *FUN***, RCA 330 JOY, **RCA 330 JOY GM**
Automatic hydraulic	/	RCA 330 *FUN*, **RCA 330 JOY**, RCA 330 JOY GM
Automatic hydraulic	on RCA 400 JOY TG, RCA 480 JOY	**RCA 380 (E)**, **RCA 400 JOY** (TG), **RCA 480 JOY**
Automatic hydraulic	on RCA 400 JOY TG, RCA 480 JOY	RCA 380 (E), RCA 400 JOY (TG), RCA 480 JOY
Automatic hydraulic	on RCA 400 JOY TG, RCA 480 JOY	RCA 380 (E), RCA 400 JOY (TG), RCA 480 JOY
Automatic hydraulic	on RCA 400 JOY TG, RCA 480 JOY	RCA 380 (E), RCA 400 JOY (TG), RCA 480 JOY
Automatic hydraulic	on RCA PRO 500	**RCA PRO 500**

SEPARATOR

for separating the sawdust and small wood particles before the firewood falls into a bag, trailer, truck or pile.

Description	Separator SP 3	Separator SP 10	Separator SP 11
Article number	248562	237551	247280
Width x Length x Height	435 x 765 x 329 mm 17" x 30" x 13"	535 x 1065 x 329 mm 21" x 42" x 13"	685 x 1065 x 329 mm 27" x 42" x 13"
Weight	20.48 kg / 45 lbs	29.8 kg / 65.7 lbs	33.4 kg / 73.6 lbs
Compatibility	TT 340	TT 404, TT 404 R, TT 504, TT 504 R	TT 510 S

OWN CHASSIS

a mobile firewood processor
RCA 330 JOY GM with wheels and a gasoline power unit (for machine operation). Similar to a trailer, the machine can be connected to a means of transport (tractor), and transportation is possible in accordance with the prescribed rules for non-homologated machines.

UPGRADED MODEL

new design, new advantages of RCA 400 JOY

- PCB (printed circuit board) instead of relays
- REED sensor - New end position sensor for splitting cylinder
- Additional U-carrier for easier loading
- Bluetooth connectivity with Tajfun MX Service app

RCA 400 JOY TG

Option TG with the additional function of the mini-joystick on the control panel allows the conveyor to move left and right by 15°.

RCA 480 JOY

- Option is XE 10 HY-V Sawdust Extractor Fan integrated into the frame of RCA.

PRO FOR **PRO**FESSIONALS

RCA PRO 500

- Automatic leveling of the wedge
- Display presents various parameters of the machine
- XE 12 HY-V integrated Sawdust Extractor Fan as standard equipment
- A completely new chain drive concept with a hydraulic motor for increased reliability and longevity

SPLITTING WEDGES

Made from Hardox® 450

Whether soft or hard, HARDOX® overcomes every kind of wood.

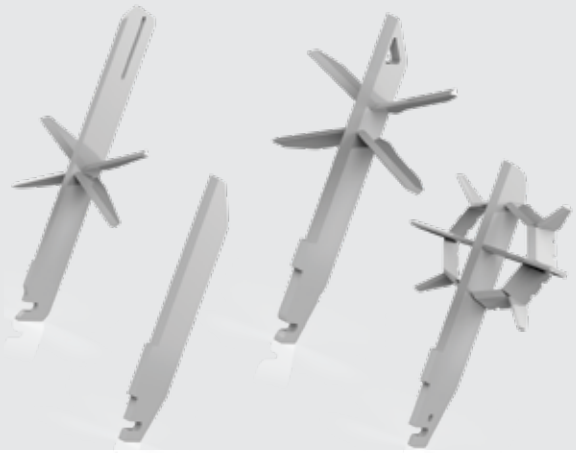

Article number	Splitting wedges for RCA 330 *FUN*, RCA 330 JOY and RCA 330 JOY GM
247126	For splitting in 4 parts
247127	For splitting in 6 parts
248907	For splitting in 8 parts

Article number	Splitting wedges for RCA 380 (E) and RCA 400 JOY
201776	For splitting in 2 parts
209757	For splitting in 4 parts
236765	For splitting in 4 or 6 parts; Splitting wedge is adjustable for splitting in 4 or 6 parts
209760	For splitting in 6 parts
209766	For splitting in 8 parts
209774	For splitting in 12 parts (appropriate for softer wood)
241123	For splitting in 12 parts (appropriate for softer wood) – ring
241243	For splitting in 16 parts (appropriate for softer wood) – ring
250745	For splitting in 16 parts STABIL– Midi (appropriate for softer wood) – ring

SPLITTING WEDGE HOLDER

As standard equipment on RCA 480 JOY and RCA PRO 500, available also as optional equipment.

WORKING LIGHT

A LED light is available for an excellent view of the splitting chute during work.

Article number	Splitting wedges for RCA 480 JOY and RCA PRO 500
259167	For splitting in 2 parts
240186	For splitting in 4 parts
240197	For splitting in 4 or 6 parts; Splitting wedge is adjustable for splitting in 4 or 6 parts
240196	For splitting in 6 parts
240217	For splitting in 8 parts
244853	For splitting in 12 parts STABIL (appropriate for softer wood) – ring
244852	For splitting in 16 parts STABIL (appropriate for softer wood) – ring
247486	For splitting in 16 parts – STABIL - MINI (appropriate for softer wood); Max Diameter of Log 40 cm – ring
254215	For splitting in 16 parts STABIL– MIDI – ring

	RCA 330 *FUN*	RCA 330 JOY	RCA 330 JOY GM	RCA 380
Length of Cut Log	20–40 cm / 8"–15.5"	20–40 cm / 8"–15.5"	20–40 cm / 8"–15.5"	25–50 cm / 9.5"–19"
Max. Diameter of Log	5–33 cm / 2"–13"	5–33 cm / 2"–13"	5–33 cm / 2"–13"	10–38 cm / 4"–15"
Sawbar	Oregon 15″, b = 1.3 mm	Oregon 16″, b = 1.5 mm	Oregon 16″, b = 1.5 mm	Oregon 17″, b = 1.5 mm
Chain	Oregon 95TXL™ 0,325", 33 teeth, b = 0,050″ (1.3 mm)	Oregon DuraCut™ 3/8″, 30 teeth, b = 0,058″ (1.5 mm)	Oregon DuraCut™ 3/8″, 30 teeth, b = 0,058″ (1.5 mm)	Oregon DuraCut™ 3/8″, 32 teeth, b = 0,058″ (1.5 mm)
Splitting Force	110 kN / 11 tons	110 kN / 11 tons	110 kN / 11 tons	150 kN / 15 tons Two Splitting Speeds
Weight withouth Discharge Conveyor	590 kg / 1300 lbs	680 kg / 1499 lbs	918 kg / 2024 lbs	900 kg / 1984 lbs
Drive	**P.T.O. Shaft drive with three-point system**	**P.T.O. Shaft drive with three-point system**	**Gasoline Engine (Kohler)** Engine Capacity: 999 ccm Engine Power: 26 kW (34 HP) Tank Capacity: 35 l / 34 gal Gear Ratio: 3000 min^{-1} / 3000 rpm Electricity Outlet: 12 V	**P.T.O. Shaft drive with three-point system**
Required Tractor Capacity	20 kW / 27 HP (Transport – 60 kW / 70 HP)	20 kW (Transport – 60 kW)		30 kW / 35 HP (Transport – 60 kW / 70 HP)
Inbound P.T.O. Shaft Speed	Min.: 400 min^{-1} / 400 rpm	Min.: 400 min^{-1} / 400 rpm		Min.: 400 min^{-1} / 400 rpm
	Max.: 430 min^{-1} / 430 rpm	Max.: 430 min^{-1} / 430 rpm		Max.: 430 min^{-1} / 430 rpm
Standard Discharge Conveyor	TT 320	TT 340	TT 320	TT 404
Oil cooler		✔ (option, with thermostat)	✔ (option, with thermostat)	✔ (option, with thermostat)
Automatic cutting chain start and stop	✔	✔	✔	
Integrated Sawdust Extractor Fan				
Productivity per hour*	5 m^3 / 1.38 cord	7 m^3 / 1.93 cord	7 m^3 / 1.93 cord	10 m^3 / 2.76 cord

*Productivity per hour contains only a calculated informative value taking into account optimal working conditions and the operator's experience.

TRANSPORT POSITION

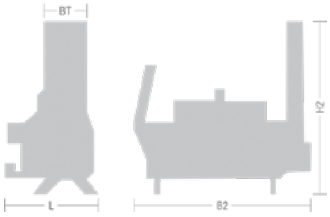

WORKING POSITION, INCLINATION 45°

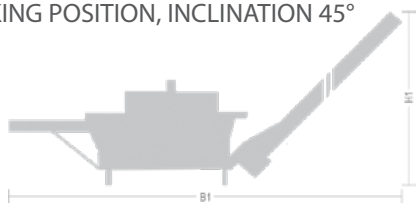

	RCA 330 *FUN*		RCA 330 JOY		RCA 330 JOY GM	
	TT 320	TT 340	TT 320	TT 340	TT 320	TT 340
Width – Working Position (B1)	4715 mm	6100 mm	4715 mm	6100 mm	5060 mm	7300 mm
Length – Working Position (L)	1250 mm	1250 mm	1250 mm	1250 mm	1520 mm	1520 mm
Height – Working Position (H1)	1775 mm	3050 mm	1775 mm	3050 mm	1780 mm	2450 mm
Width – Transport Position (B2)	2320 mm	2320 mm	2320 mm	2320 mm	3660 mm	4050 mm
Length – Transport Position (L)	1250 mm	1250 mm	1250 mm	1250 mm	1520 mm	1520 mm
Height – Transport Position (H2)	2480 mm	2510 mm	2480 mm	2510 mm	2590 mm	2590 mm

	RCA 330 *FUN*		RCA 330 JOY		RCA 330 JOY GM	
	TT 320	TT 340	TT 320	TT 340	TT 320	TT 340
Width – Working Position (B1)	186"	240"	186"	240"	199"	287"
Length – Working Position (L)	49"	49"	49"	49"	60"	60"
Height – Working Position (H1)	70"	94"	70"	94"	60"	96"
Width – Transport Position (B2)	91"	91"	91"	91"	144"	159"
Length – Transport Position (L)	49"	49"	49"	49"	60"	60"
Height – Transport Position (H2)	98"	99"	98"	99"	102"	102"

* for container transport

RCA 380 E	RCA 400 JOY / RCA 400 JOY TG	RCA 480 JOY	RCA PRO 500
25–50 cm / 9.5"–19"	25–50 cm / 9.5"–19"	25–50 cm / 9.5"–19"	25–50 cm / 9.5"–19"
10–38 cm / 4"–15"	5–40 cm / 2"–16"	5–48 cm / 2"–19"	5–50 cm / 2"–20"
Oregon 17″, b = 1.5 mm	Oregon 17″, b = 1.5 mm	Oregon 24″, b = 1.5 mm	Cannonbar 24″, b = 1.5 mm
Oregon DuraCut™ 3/8″, 32 teeth, b = 0,058″ (1.5 mm)	Oregon DuraCut™ 3/8″, 32 teeth, b = 0,058″ (1.5 mm)	Oregon DuraCut™ 3/8″, 42 teeth, b = 0,058″ (1.5 mm)	Oregon DuraCut™ 3/8″, 42 teeth, b = 0,058″ (1.5 mm)
150 kN / 15 tons Two Splitting Speeds	150 kN / 15 tons Two Splitting Speeds	250 kN / 25 tons Two Splitting Speeds	250 kN / 25 tons Two Splitting Speeds
1100 kg / 2204 lbs	950 kg / 2094 lbs	1300 kg / 2866 lbs	1650 kg / 3637lbs (with Discharge Conveyor)
Electric Motor (3-phase) 11 kW, 400 V/50 Hz, 2.910 min^{-1} 15 HP, 400 V/ Hz, 2910 rpm	**P.T.O. Shaft drive with three-point system** 30 kW / 35 HP (Transport – 60 kW / 70 HP)	**P.T.O. Shaft drive with three-point system** 30 kW / 35 HP (Transport – 70–80 kW / 94–107 HP)	**P.T.O. Shaft drive with three-point system** 30 kW / 35 HP (Transport – 70–80 kW / 94–107 HP)
	Min.: 400 min^{-1} / 400 rpm	Min.: 400 min^{-1} / 400 rpm	Min.: 400 min^{-1} / 400 rpm
	Max.: 430 min^{-1} / 430 rpm	Max.: 430 min^{-1} / 430 rpm	Max.: 430 min^{-1} / 430 rpm
TT 404	TT 404	TT 404	TT 510 S
✔ (option, with thermostat)	✔ (standard, with thermostat)	✔ (standard, with thermostat)	✔ (standard, with thermostat)
	✔	✔	✔
		✔ (option, sawdust extractor Fan XE 10 Hy-V)	✔ (standard, sawdust extractor Fan XE 12 Hy-V)
10 m^3 / 2.76 cord	10 m^3 / 2.76 cord	13 m^3 / 3.59 cord	14 m^3 / 3.86 cord

TRANSPORT POSITION - RCA 330 JOY GM

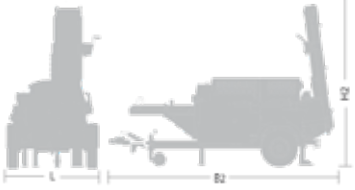

WORKING POSITION, INCLINATION 45° - RCA 330 JOY GM

RCA 380 / RCA 380 E		RCA 400 JOY / RCA 400 JOY TG		RCA 480 JOY		RCA PRO 500
TT 404, TT 404 R	TT 504, TT504 R	TT 404, TT 404 R / TG	TT 504, TT 504 R / TG	TT 404, TT 404 R	TT 504, TT 504 R / TT 510 S	TT 510 S
6100 mm	6930 mm	6100 mm	6930 mm	6100 mm	6930 mm	6930 mm
1400 mm	1400 mm	1400 mm	1400 mm	1600 mm	1600 mm	1625 mm
3070 mm	3800 mm	3150 mm	3800 mm	3150 mm	3800 mm	3800 mm
2350 mm	2350 mm	2350 mm	2350 mm	2410 mm	2410 mm	2410 mm
1400 mm	1400 mm	1400 mm	1400 mm	1600 mm	1600 mm	1625 mm
2360 mm	2768 mm	2480 mm / 2250 mm	2768 mm / 2550 mm	2330 mm	2630 mm	2630 mm

RCA 380 / RCA 380 E		RCA 400 JOY / RCA 400 JOY TG		RCA 480 JOY		RCA PRO 500
TT 404, TT 404 R	TT 504, TT504 R	TT 404, TT 404 R / TG	TT 504, TT 504 R / TG	TT 404, TT 404 R	TT 504, TT 504 R / TT 510 S	TT 510 S
240"	273"	240"	272.75"	240"	240"	240"
55"	55"	55"	55"	63"	63"	64"
121"	150"	124"	149.5"	124"	150"	150"
92" (91")*	92" (91")*	93" (91")*	93" (91")*	95"	95"	95"
55"	55"	55"	55"	63"	63"	64"
93" (87")*	93" (87")*	98" (87")*/89"	109" / 100"	91"	103"	103"

RCA ACCESSORIES

Compatibility

Article number	Description	RCA 330 *FUN*	RCA 330 JOY
236495	Splitting Wedge Holder		
259967	Working light		✓
209294	Log Loader DM 1511 M	✓ only with Control SET for(254327)	✓
245348	Log Loader DM 2000	✓ only with Control SET for (254327)	✓
255415	Live Deck RN 2000 S	✓ only with Control SET for (254327)	✓
241126	Live Deck RN 5000 S	✓ only with Control SET for (254327)	✓
241125	Live Deck RN 5000 M	✓ only with Control SET for (254327)	✓
212070	Live Deck RN 1500 F	✓ only with Control SET for (254327)	✓
210360	Roller Table E01	✓	✓
245809	Roller Table E13	✓	✓
255395	Roller Table with a base M 2000	✓	✓
248055	Gasoline Power Unit GP 35		
248971	Support legs for the Gasoline Power Unit GP 35		
253885	Mobile Gasoline Power Unit GP 35 M	✓	✓
245514	Hydro Power Unit HP 25	✓ (with Adapter 256670)	✓ (with Adapter 256670)
248527	Hydro Power Unit HP 30	✓ (with Adapter 256670)	✓ (with Adapter 256670)
200481	Electric Power Unit EP 12	✓	✓
260975	Electric Power Unit EP 20	✓	✓
249448	Sawdust Extractor Fan XE 10 M	✓ (with Adapter 249480)	✓ (with Adapter 249480)
249472	Sawdust Extractor Fan XE 10 Hy M	✓ (with Adapter 249480)	✓ (with Adapter 249480)
250057	Sawdust Extractor Fan XE 11 Hy M	✓ (with Adapter 249480)	✓ (with Adapter 249480)
211311	Sawdust Extractor Fan XE 10 Hy		
238999	Sawdust Extractor Fan XE 11 Hy		
242287	Sawdust Extractor Fan XE 10 Hy-V		
	Sawdust Extractor Fan XE 12 Hy-V		
504287	Mobile Sawdust Separator GRENC	✓	✓
210123	Stand for woodbag SV 01	✓	✓
504785	P.T.O. Shafts Tajfun C Line-T 6BR+ KK560	✓	✓
513068	P.T.O. Shafts Tajfun C Line-T4 DZ DZ BR+KK510	✓	✓
517267	P.T.O. Shafts Tajfun C Line-T6 DZ DZ BR+KK610		
503990	Walterscheid P.T.O. Shafts - WWZ 2380 SDF25 710	✓	✓
504283	Walterscheid P.T.O. Shafts - WWZ 2380 SDF25 860	✓	✓
257313	SET Rotating shaft tachometer and hour meter	✓	✓
243640	Platform PO 10		

Video
RCA 380

RCA 330 JOY GM	RCA 380	RCA 380 E	RCA 400 JOY	RCA 480 JOY	RCA PRO 500
				✓	✓
✓			✓	✓	✓
✓	✓	✓	✓		
✓	✓	✓	✓	✓	✓
✓	✓	✓	✓	✓	✓
✓	✓	✓	✓	✓	✓
✓	✓	✓	✓	✓	✓
✓	✓	✓	✓	✓	✓
✓	✓	✓	✓	✓	
✓	✓	✓	✓	✓	
✓	✓	✓	✓	✓	✓
	✓		✓	✓	
	✓		✓	✓	
	✓		✓	✓	
	✓		✓	✓	
	✓		✓	✓	
	✓		✓	✓	
	✓		✓	✓	✓
✓ (with Adapter249480)	✓	✓	✓	✓	
✓ (with Adapter 249480)	✓	✓	✓	✓	
✓ (with Adapter 249480)	✓	✓	✓	✓	
	✓	✓	✓	✓	
	✓	✓	✓	✓	
				✓	
					✓ (as standard equipment)
✓	✓	✓	✓	✓	✓
✓	✓	✓	✓	✓	✓
	✓		✓	✓	✓
	✓		✓	✓	
				✓	✓
	✓		✓	✓	✓
	✓		✓	✓	✓
	✓		✓	✓	
				✓	✓

Video

RCA 480 JOY

ROLLER TABLES

available as an independent units.

Roller Table E01 and E13	
Length x Width	767 x 2010 mm / 30.25" x 79.25"
Roller Length	470 mm / 18.50"
Weight	133 kg / 293 lbs

ROLLER TABLE E01 AND E13

ROLLER TABLE WITH A BASE M 2000

Roller Table with a base M 2000	
Length x Width x Height	2000 x 1150 x 940 mm / 79" x 45" x 37"
Roller Length	470 mm / 18"
Weight	222 kg / 489 lbs

LOG LOADERS

LOG LOADER DM 1511 M

It is used for lifting the logs to the working height of the processor's in-feed belt. It can also be used to hold the next log to be processed. This loader is equipped with 2 hydraulically driven in-feed rollers synchronized to the speed of the processor's in-feed belt.

Log Loader DM 1511 M	
Drive	RCA Hydraulic System
Control	on RCA
Lifting Power	4500 N / 1012 lbs
Length x Width x Height	1840 x 1300 x 900 mm / 72" x 51" x 35"
Weight	171.6 kg / 378.3 lbs

Log Loader DM 2000	
Drive	RCA Hydraulic System
Control	on RCA
Lifting Power	7000 N / 1573 lbs
Working height is adjustable from	900 mm or 1050 mm / 35" or 59"
Length x Width x Height	1650 x 2000 x 1150 mm / 65" x 79" x 45"
Weight	365.5 kg / 805.8 lbs

LOG LOADER DM 2000

It is used for lifting logs to working height of the processor's infeed belt. It can also be used to hold the next log to be processed. Important advantages of the loader are its adjustable working height at 900 or 1050 mm / 35" or 59" and its compatibility to all RCA models. Log loader DM 2000 is equipped with 3 hydraulically driven rollers synchronized to the speed of the processor's in-feed belt designed to enable better log in-feed. This feature helps significantly with heavier logs.

LIVE DECKS

LIVE DECK RN 1500 F

enables easier and faster log-feed and increases RCA's capacity. It is run of RCA's hydraulic system and controlled by existing controls on the processor. It is designed for a single person use. Live deck is stable, intended to be mounted on a trailer*.

Live Deck RN 1500 F	
Drive	RCA Hydraulic System
Control	on RCA
Length x Width x Height	3080 mm x 2000 mm x adjustable up to 1076 mm / 121" x 78" x adjustable up to 42˝ (hight on rollers)
Length x Width x Height (transport position)	1464 x 2000 x 2601 mm / 57" x 78" x 101"
Trailer height	min 480 mm / max 630 mm (RCA 480 JOY) and max 780 mm (RCA 400 JOY) / min 1.57"/max 2.06" (RCA 480 JOY) and max 2.56" (RCA 400 JOY)
Weight	570 kg / 1266 lbs
Working Surface	aprox. 9 x 4 m / 30' x 13'
Max. Dim of Processed Logs	up to 6 m / up to 19.5'
Storage Capacity	2 t (or up to 3 m³) / 2 t (or up to 106 ft³)
Storage Length	2100 mm / 82"

*The trailer is not part of the sales program of company Tajfun Planina d.o.o.!

LIVE DECK RN 2000 S

It serves as a stock deck for small diameter logs that the operator manually loads onto the rollers of the Live Deck. Hydraulically driven rollers feed the logs into the firewood processor. It is driven by the processor's hydraulic system and controlled by existing machine controls. The whole assembly can be controlled by the operator of the processor.

Live Deck RN 2000 S	
Drive	RCA Hydraulic System
Control	on RCA
Working Surface	aprox. 9 x 4 m / 30' x 13'
Max. dimension of processed logs	up to 6 m / 19.5'
Storage Capacity (base model)	2 t (or up to 3 m³) / 2 tons (or up to 106 ft³)
Storage Length (base model)	1850 mm / 72"
Weight	381 kg / 840 lbs

ADJUSTABLE INCLINE

The incline of the liftable part of the deck can be changed for easier manual loading of logs onto the drive rollers.

Log Loader RN 2000 S	
Height – Working position (H1)	872–1122 mm / 34.3"–44.2"
Height – Working position (H2)	872–1122 mm / 34.3"–44.2"
Length RN 2000 S Live Deck (base model) (L1)	2623 mm / 103.3"
Length of the RN 2000S Live Deck extension (option) (L2)	1760 mm / 69"
Length x Width x Height (working position)	2623 x 1840 x 872 mm / 103.3" x 72.4" x 34.3"
Length x Width x Height (transport position for two pieces)	2000 x 1250 x 2060 mm / 78.7" x 49.2" x 81.1"

ADJUSTABLE MOUNTING OF GUIDE LEANS

Guide leans can be mounted in different positions.

Article number	Accessories for RN 2000 S	Weight
255416	Live Deck RN 2000 S extension	123.50 kg / 272.3 lbs
255417	Additional guide lean for RN 2000 S	28.50 kg / 62.8 lbs
249488	Sliding plates	4.7 kg / 10.7 lbs

ADDITIONAL GUIDE LEAN

prevents shorter logs (1 m / 3.2" length) from getting stuck or falling from the RN 2000 S Live Deck. (Accessories)

TWO SLIDING PLATES,

which are mounted between the rollers of the live deck. Recommended for the processing of short logs in combination with an additional guide lean. (Accessories)

RN 2000 S LIVE DECK EXTENSION

increases stock deck capacity. Incline of the RN 2000 S Live Deck extension can also be lifted to change the incline. (Accessories)

LIVE DECK RN 5000 (S / M)

is an efficiency enhancing option to the Tajfun firewood processors, which allows easier and faster log loading and feeding of the processor, greatly increasing operating efficiency. It is driven by the processor's hydraulic system and controlled by existing machine controls. The whole assembly can be controlled by the operator of the processor. The Live Deck RN 5000 S is stationary with six adjustable jacks for legs. RN 5000 M is equipped with an axle and wheels for transport, as well as the six adjustable jacks for legs.

	Live Deck RN 5000
Drive	RCA Hydraulic System
Control	on RCA
Working height is adjustable from	900 mm to 1400 mm / 35.4" to 55"
Length x Width x Height	4160 x 2010 x 1495 mm / 164" x 79" x 59" (S) 5350 x 2010 x 1495 mm / 211" x 79" x 59" (M)
Length x Width x Height (transport position for three pieces)	3237 x 1803 x 1902 mm / 127" x 71" x 75"
Weight	650 kg / 1430 lbs (RN 5000 S) 715 kg / 1576 lbs (RN 5000 M)
Working Surface	aprox. 9 x 4 m 30' x 13'
Max. Dim of Processed Logs	up to 6 m / 19.5'
Storage Capacity	5 t or up to 6 m^3 / 5 tons or up to 211.89 ft^3
Storage Length	3000 mm / 118 "

TOWING EYE

Ø 40 mm / 1.6" for mobile live deck
(Article number: 236494)

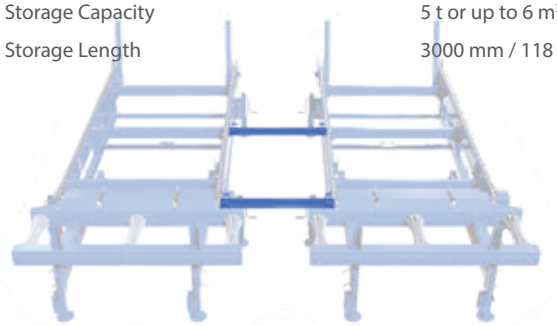

TWIN

connections set transversely allows the connection of two stable live decks to increase the loading capacity and allows longer logs to be loaded.
(Article number: 210929)

AN ADDITIONAL DRIVE CHAIN

(option) for live deck
(Article number: 249496)

THE OPTIONAL RN 5000 D LIVE DECK

increases the loading capacity. It attaches to the rear of the stabile live decks as an extension.
(Article number: 251417)

EXTERNAL DRIVE UNITS

GASOLINE POWER UNIT GP 35 (M)

is a substitute for tractor drive. It is powered by a gasoline Kohler engine and connected with a P.T.O. shaft. Power unit mounts on RCA's lower hitch, is on a hinge and can be rotated left towards the machine for transport position. This is a perfect solution for a trailer based firewood processor (the trailer is not part of the sales program of company Tajfun Planina d.o.o.!).

Available also as mobile version - Gasoline Power Unit GP 35 M. It can be connected to machines with a P.T.O. Shaft (cardan shaft).

SUPPORT LEGS

for the gasoline power unit GP 35 are height-adjustable and enable additional stability of the power unit.
(Article number: 248971)

P.T.O. SHAFT TAJFUN

C Line-T 6BR+ KK560
(Article number: 504785)

	Gasoline Powered Unit GP 35	Gasoline Powered Unit GP 35 M
Engine Capacity	999 cm^3 (Kohler)	999 cm^3 (Kohler)
Engine Power	35 HP (27 kW)	35 HP (27 kW)
Control	Controls on the Engine	Controls on the Engine
Width x Length x Height	960 x 750 x 800 mm / 38" x 30" x 32"	800 x 1300 x 1100 mm / 32" x 51" x 43"
Weight	200 kg / 440 lbs	206 kg / 454 lbs
Tank Capacity	57 l / 15 gal	57 l / 15 gal
Gear Ratio	1:7 (430 min^{-1} at 3000 min^{-1} / 430 rpm at 3000 rpm on the Engine)	1:7 (430 min^{-1} at 3000 min^{-1} / 430 rpm at 3000 rpm on the Engine)
Electricity Outlet	12 V	12 V

HYDRO POWER UNIT HP 25 AND HP 30

is a substitute for tractor drive. It is powered by hydro-engine that mounts on RCA's gearbox housing. Connection to the RCA is direct, no P.T.O. shaft is required. This is a perfect solution where only machines with hydraulic outputs are available. Hydro Power Unit connects to the drive engine with hydraulic hoses and power is guaranteed. It has a monitor for working hours and rpm.

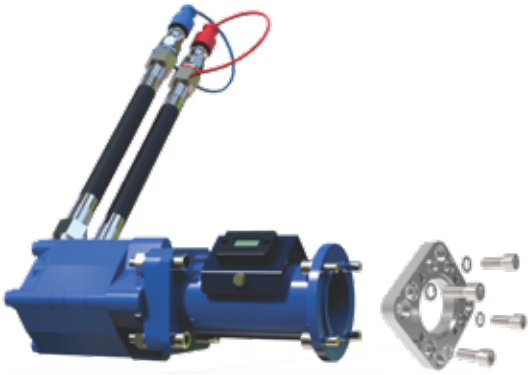

	Hydro Power Unit HP 25	Hydro Power Unit HP 30
Oil flow	70–80 l/min / 18.49 – 21.13 gal/min	100–120 l/min / 26.42 – 31.7 gal/min
Max. pressure	210 bar / 3,046 psi	210 bar / 3,046 psi
Output speed	430 min^{-1} / 430 rpm	430 min^{-1}/ 430 rpm
Power	33 HP (25 kW)	44 HP (33,5 kW)
Weight	22 kg / 48.5 lbs	35 kg / 48.5 lbs

ADAPTER

for RCA 330 JOY and RCA 330 *FUN*
(Article number: 256670)

ELECTRO POWER UNIT EP 12 AND EP 20

is a substitute for tractor drive for operation of
Tajfun RCAs.

P.T.O. SHAFT TAJFUN

C Line-T 6BR+ KK560
(Article number: 504785)

	Electro Power Unit EP 12	Electro Power Unit EP 20
Power Unit	11 kW; 1.500 min^{-1}; 50 Hz; 3 Phase 400 V	15 kW; 1.500 min^{-1}; 50 Hz; 3 Phase 400 V
Output	RCA (12 V / 25 A), XE 10 (230 V)	RCA (12 V / 25 A), XE 10 (230 V)
Inbound P.T.O. Shaft Speed	430 min^{-1} / 430 rpm	430 min^{-1} / 430 rpm
Length x Width x Height	1446 x 901 x 940 mm / 57" x 35.5" x 37"	1446 x 901 x 940 mm / 57" x 35.5" x 37"
Weight	256.6 kg / 565.7 lbs	265.80 kg / 585.9 lbs

Portable Frame with
Coupling Console

Electric Drive with
Reduction Gearbox

Output Socket 10/16 A 250 V ~)
Output Socket (7 pole) 25 A (12 V =)
Output Socket (3 pole) 25 A (12 V =)

Main switch, input socket
(with plug) 32 A – 6 h; 3P
+ N + E and start – stop
switch with cable.

SAWDUST EXTRACTOR FANS

are an excellent addition when working with Tajfun RCAs. They enable immediate removal of sawdust, generated by sawing. Sawdust Extractor Fans are even more efficient when used together with the Mobyle Sawdust Separator GRENC, in which the sawdust, generated by log sawing is stored.

MOBILE SAWDUST SEPARATOR GRENC

Collector of sawdust extracted with the Tajfun Sawdust Extractor Fan

Mobile Sawdust Separator GRENC	
Bag Volume	180 l / 47 gal
Width x Length x Height (Transport dimensions)	550 x 550 x 1625 mm / 21.75" x 21.75" x 64"
Working Height	2650 mm / 104.75"
Suction Tube	Ø 120 mm / Ø 5"
Weight	29 kg / 64 lbs

SAWDUST EXTRACTOR FAN ADAPTER

for use on RCA 330 *FUN*, RCA 330 JOY and RCA 330 JOY GM
(Article number: 249480)

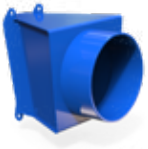

MOBILE SAWDUST EXTRACTOR FAN XE 10 M

is driven by an electric motor (when using EP 12, it allows connection to 230 V output of EP 12). Sawdust Extractor Fan is mobile and thus enables easy placement in the desired workplace.

Mobile Sawdust Extractor Fan XE 10 M	
Connecting Power	1,1 kW, 230 V; 50 Hz-single phase
RPM	2860 min^{-1} / 2860 rpm
Protection Level CEI 70-1(EN 60529)	IP 54
Pressure Tube Diameter and Length	Ø 120 mm; 5 m / Ø 5"; 16.4'
Suction Tube Diameter and Length	Ø 140 mm; 2 m / Ø 5.5"; 6.6'
Length x Width x Height (working position)	460 x 650 x 935 mm / 18" x 25.6" x 37"
Length x Width x Height (transport dimensions of a box)	800 x 600 x 600 mm / 31.5" x 23.75" x 23.5"
Weight	46.2 kg / 101.8 lbs

MOBILE SAWDUST EXTRACTOR FAN XE 10 Hy M AND XE 11 Hy M

is driven by a hydraulic motor, which is connected to the tractor's hydraulic system. Sawdust Extractor Fan is mobile and thus enables easy placement in the desired workplace.

	Mobile Sawdust Extractor Fan XE 10 Hy M	Mobile Sawdust Extractor Fan XE 11 Hy M
RPM	~2700 min^{-1} / ~2700 rpm	~2700 min^{-1}/ ~2700 rpm
Necessary Hydraulic Oil Circulation	20 l/min / 5 gal/min	40 l/min / 10.5 gal/min
Max. Hydraulic Oil Circulation	60 l/min / 15 gal/min	80 l/min / 21 gal/min
Pressure Tube Diameter and Length	Ø 120 mm; 5 m / Ø 5"; 16.4'	Ø 120 mm; 5 m / Ø 5"; 16.4'
Suction Tube Diameter and Length	Ø 140 mm; 2 m / Ø 5.5"; 6.6'	Ø 140 mm; 2 m / Ø 5.5"; 6.6'
Length x Width x Height (working position)	460 x 650 x 935 mm / 18.11" x 25.6" x 36.8"	460 x 650 x 935 mm / 18.11" x 25.6" x 36.8"
Length x Width x Height (transport dimensions of a box)	800 x 600 x 600 mm / 31.5" x 23.75" x 23.5"	800 x 600 x 600 mm / 31.5" x 23.75" x 23.5"
Weight	44 kg / 97 lbs	45 kg / 99.2 lbs

SAWDUST EXTRACTOR FAN XE 10 Hy AND XE 11 Hy

is driven by a hydraulic motor, which is connected to the tractor's hydraulic system.

	Sawdust Extractor Fan XE 10 Hy	Sawdust Extractor Fan XE 11 Hy
RPM	~2700 min^{-1} / ~2700 rpm	~2700 min^{-1}/ ~2700 rpm
Necessary Hydraulic Oil Circulation	20 l/min / 5 gal/min	40 l/min / 10.5 gal/min
Max. Hydraulic Oil Circulation	60 l/min / 15 gal/min	80 l/min / 21 gal/min
Pressure Tube Diameter and Length	Ø 120 mm; 5 m / Ø 5"; 16.4'	Ø 120 mm; 5 m / Ø 5"; 16.4'
Suction Tube Diameter and Length	Ø 140 mm; 2 m / Ø 5.5"; 6.6'	Ø 140 mm; 2 m / Ø 5.5"; 6.6'
Length x Width x Height (working position)	375 x 636 x 700 mm / 14.76" x 25.04" x 27.56"	390 x 636 x 700 mm / 15.35" x 25.04" x 27.56"
Length x Width x Height (transport dimensions of a box)	800 x 600 x 600 mm / 31.5" x 23.75" x 23.5"	800 x 600 x 600 mm / 31.5" x 23.75" x 23.5"
Weight	30 kg / 66.13 lbs	32 kg / 66.13 lbs

STAND FOR WOODBAG SV 01

is a Tajfun firewood processor accessory. Once split, the firewood travels on the conveyor and drops into a woodbag fixed on a stand. Due to the removable transverse tube, the filled woodbag can be easily removed and kept ready for further transport.

WOODBAG

A woodbag can be easily fixed on a stand. Available also as an independent item. (Article number: 503927)

Stand for woodbag SV 01	
Width x Length x Height (working position)	1210 x 1210 x 1980 to 2280 mm / 47.63" x 47.63" x 77.95" up to 89.76"
Width x Length x Height (transport dimensions)	cca. 1500 x 300 x 300 mm / ca. 59.05" x 11.81" x 11.81"
Weight	74 kg / 163 lbs
Firewood bag volume	1000 x 1000 x 1600 mm / 39.37" x 39.37" x 62.99"
Firewood bag weight	1.7 kg / 3.74 lbs

PO 10 PLATFORM

is the ideal solution for working with RCA on rough terrain as by using the PO 10 Platform the operator has a stable and flat walkable area ensured. PO 10 Platform is made of walkable grid which protects the user from moisture, mud and cold.

PO 10 Platform	
Length x Width x Height	1513 x 800 x 120–170 mm / 59.56" x 31.50" x 4.70"–6.70"
Weight	40 kg / 88.20 lbs

TAJFUN P.T.O. SHAFTS

- Easy to use, user friendly C Line connection
- Flexible protection hood, which allows easy access to connecting mechanism and grease nipples

	Dimensions*
P.T.O. Shaft Tajfun C Line-T 6BR+ KK560	1 3/8" Z6 – 1 3/8" Z6; L_{KK} = 560
P.T.O. Shaft Tajfun C Line-T4 DZ DZ BR+KK510	1 3/8" Z6-2X; L_{KK} = 510
P.T.O. Shaft Tajfun C Line-T6 DZ DZ BR+KK610	1 3/8" Z6-2X; L_{KK} = 610

*L_{KK} – P.T.O. Shaft length between pivot points (mm), in compressed position rounded to 10 mm / 0.4"

ROTATING SHAFT TACHOMETER AND HOUR METER (SET)

The set is installed on the P.T.O. Shaft to reliably record the number of revolutions and working hours.

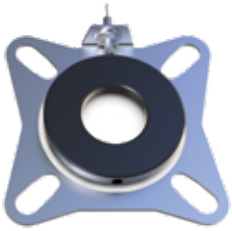

WALTERSCHEID P.T.O. SHAFTS

	Dimensions*
P.T.O. Shaft WWZ 2380 SDF25 710	1 3/8" Z6 – 1 3/8" Z6; L_{KK} = 710
P.T.O. Shaft WWZ 2380 SDF25 860	1 3/8" Z6 – 1 3/8" Z6; L_{KK} = 860

*L_{KK} – P.T.O. Shaft length between pivot points (mm), in compressed position rounded to 10 mm / 0.4"

TAJFUN
EGV 85 A
Visit us on
shop.tajfun.com

LOGGING WINCHES

Mechanical, hydraulic,...

Tajfun started developing and manufacturing logging winches in 1979. We constantly update, upgrade and develop different winch types for different needs. The results of our long term development are:

- Simple and fast set up and take down
- Reliable and easy hydraulic (Type AHK and VIP PRO) or mechanical control (Type A),
- Very simple and fast installation to tractor's three-point mounting system,
- Robotic welded stable and robust construction, made of high quality steel, laser cut and powder coated,
- Sturdy drive line, each shaft with double bearings and double reduction gearing (winches from 45 kN / 10,100 lbs to 100 kN / 22,500 lbs),
- Highly efficient clutch activation, even with mechanical winches – short pull, low activation pressure,
- High efficiency and safety.

TAJFUN LOGGING WINCHES

- with mechanical (A) or electro-hydraulic (AHK and VIP PRO) control
- Single or double drum version
- From 35 kN / 7,900 lbs to 100 kN / 22,500 lbs of Pulling Power

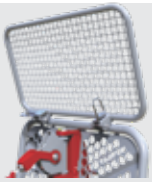

Upper safety net can be set into two working and one transport position.

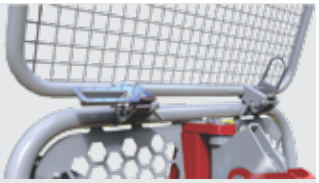

Pickaroon holder

Large and stable parallel shielded pulleys follow the pulling direction, even at highest loads.

Grooves and hangers for chains

Coupling - serial, removable with bolts
(Does not apply for VIP PRO 90 and DGV 2X55 AHK).

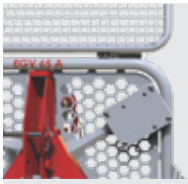

Chainsaw holder

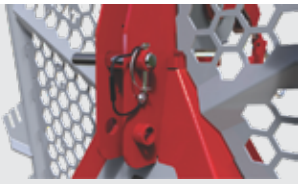

Adjustable upper coupling (Does not apply for VIP PRO 90)

Folding shaft holder

A new and remodeled lower pulley with a patented system for quick insertion and extraction of the wire rope

Two covered toolboxes (Does not apply for models EGV 35 A, EGV 105 AHK, DGV 2X55 AHK and VIP PRO 90)

Coupling bolts with patented safety system. Two holes for coupling enable optimum winch approach towards the tractor for higher stability. (Does not apply for models EGV 35 A, EGV 105 AHK and DGV 2X55 AHK)

Two folding support legs ensure stability of the standalone winch. (Support legs are not folding at EGV 35 A and DGV 2X55 AHK).

HIGH QUALITY, WIDE PROTECTION BLADE

with an enforced lower blade, made of Hardox® metal. Wedged shape of the blade ensures safe anchoring.

LARGE AND MASSIVE DRUM (large capacity of the rope)

- A large drum diameter (small loss of pulling power and longer rope lifespan)
- Strong drum walls
- Wide brake band
- High quality SKF bearings
- High pulling force and lower loading of component parts due to a 3 or 5 plate clutch
- Thick strengthened drive chain SKF.

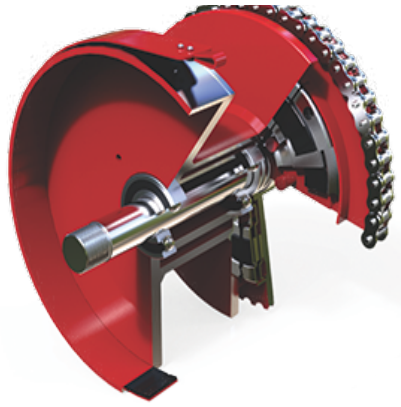

TAJFUN HYDRAULIC WINCHES (AHK)

Tajfun hydraulic winches have electro hydraulic control and a separate hydraulic system.

This provides comfortable, safe and simple control of the winch with a control pendant or a radio remote control (optional). The radio remote control option enables the control of the winch (without additional interventions in the winch or tractor) and tractor (engine revolution regulation, engine start and stop, turning on the shaft – the functions are installed by an authorized service technician). The main advantage of such control is that it allows the operator to safely control the winch and tractor alone, thus ensuring greater effectiveness and safety at work.

BIO-OIL
DIVINOL
HE 46

Hydraulic logging winches are also available with bio-oil.

An oil reservoir with a sprue on the outer part of the frame.

A long window showing the oil level.

Electro hydraulic system is built into the construction and thus protected from possible damage and weather conditions.

The pump is driven by a cogwheel multiplicator. A pressure filter is installed behind the pump that additionally makes sure that the oil in the system is clean.

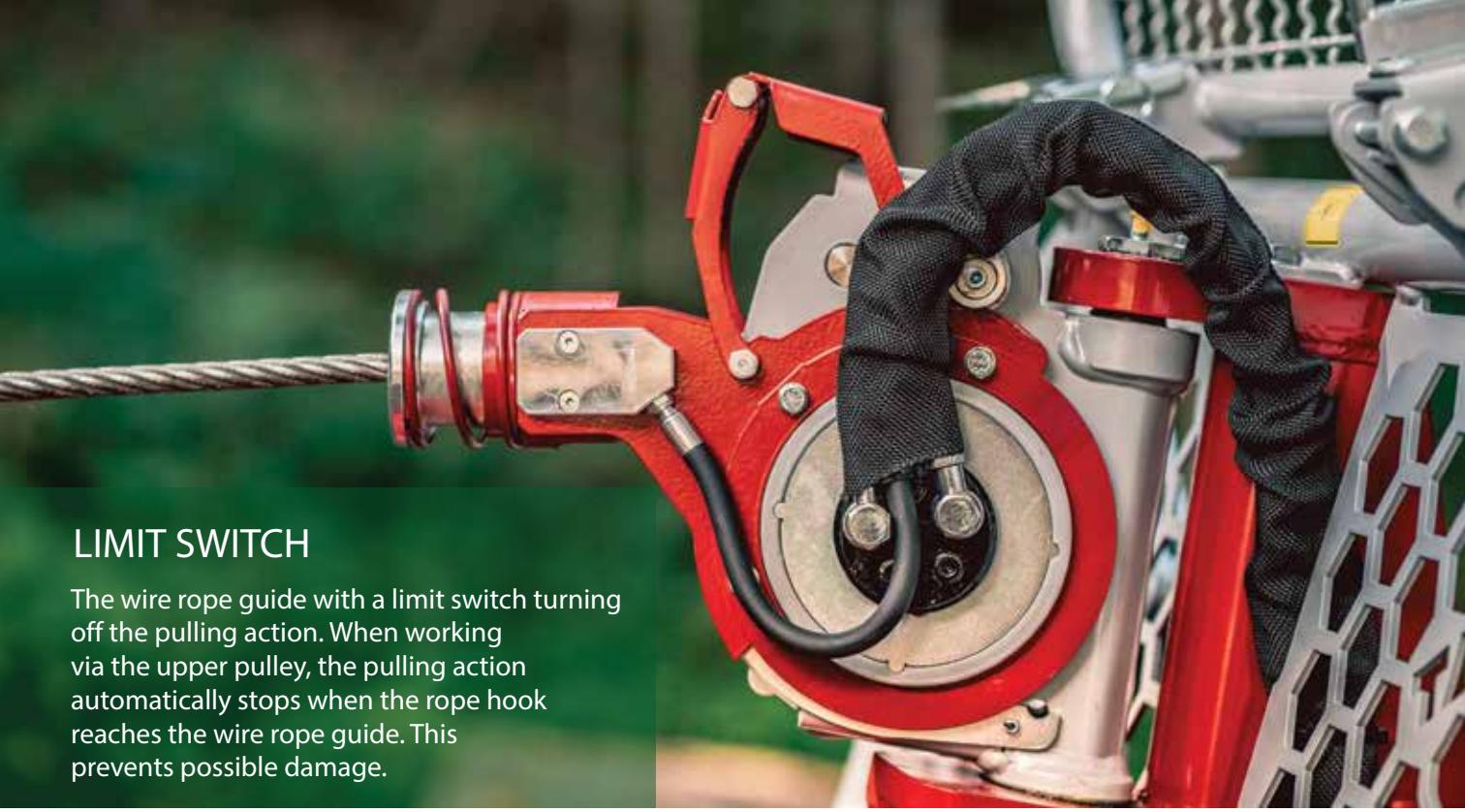

LIMIT SWITCH

The wire rope guide with a limit switch turning off the pulling action. When working via the upper pulley, the pulling action automatically stops when the rope hook reaches the wire rope guide. This prevents possible damage.

TAJFUN SG DRIVEN PULLEY

- Additional help with extracting the rope from the drum.
- Ensures even and solid wire rope coiling on the drum, even when the rope is not under tension.
- Extends the rope lifespan.
- Built-in limit switch for turning off the pulling action.
- Pressure wheels ensure a good grip on the wire rope at extraction and pulling in, regardless of external influences.
- Minimal maintenance.
- Accessories for hydraulic winches AHK

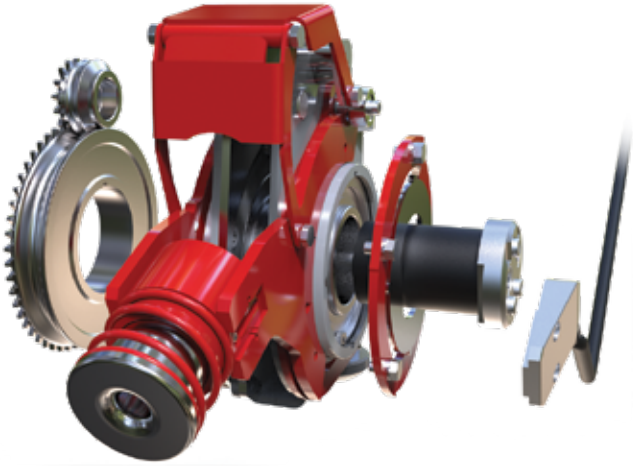

BUTTON FOR REGULATING THE PULLING SPEED

Continuous regulation of wire rope pulling speed

ROPE SHIELD SG

prevents the forming of loops when feeding the rope from the winch. Standard equipment for all winches with a driven pulley (SG). Can be also installed on older SG pulleys.

EGV 65 AHK ZS

Front and rear side installation

is Tajfun's single drum hydraulic logging winch, designed for installation to tractor's front side. It also provides rear end installation. This versatile usage is possible due to special reduction gear with two connecting shafts (upper and lower). The second stage drive is designed using quality gearing with additional tensioner, which allows better chain tensioning and more silent winch operation.

FRONT - REAR SIDE INSTALLATION

- When connecting the winch to the tractor's front side, the upper connecting shaft is used; standard revolution 1000 min^{-1} / 1000 rpm and right P.T.O. Shaft rotating direction.
- When connecting the winch to the tractor's rear side, the lower connecting shaft is used; rotating speed 540 min^{-1} / 540 rpm and left P.T.O. Shaft rotating direction.

DGV 2X55 AHK

Double Drum Winch

is a winch with three point connecting system, intended for heavy logging. Its modern design offers wide usability, easy and reliable operation and long lifespan. The winch is made according to international technical and safety regulations. It is controlled by built-in hydraulic system and operated by using a control pandant or radio remote control.

TWO DRUMS

- Drums are turning in opposite directions and allow equal distribution of forces on the frame. The drums are functionally independent and offer simultaneous work.
- They are positioned in the lower part of the frame and are driven by a powerful gear reducer in combination with two chain transmissions. This results in lower center of gravity of the winch and high distance between the drum and the inner pulley allows better wire rope coiling and lower center of gravity of the winch.

VIP PRO 90

The VIP PRO 90 logging winch, with 90 kN / 20,250 lbs pulling power and many features, is the pioneer of a new generation of winches...

VIP PRO 90 G - hydraulically moveable bottom blade

- Robust gearbox with high efficiency (98%)
- High quality Strenx® and Hardox® frame
- Pull-activated wire rope feeding (adjustable prevents uncontrolled wire rope unwinding
- Continuous regulation of wire rope feeding speed
- Limit switch
- Lower pulley
- Hydraulically movable logging blade (Optional)

VIP PRO 90

logging winch for working in the harshest working conditions and on challenging terrain. Working under these conditions is also greatly facilitated by:

- Pull-activated wire rope feeding prevents uncontrolled wire rope unwinding. This way, you can control the amount of unwound wire rope required. The feeding activation force is adjustable, depending on whether the wire rope needs to be pulled up or down.
- The winder provides proper winding of the wire rope along the entire width of the drum. This enables correct winding, even when the rope is not taut, as it is throttled by the feeding device integrated in the winder.

Video Landwirt Test
Tajfun VIP PRO 90

VIP PRO 90 F - fixed bottom blade

VIP PRO 90 is the first reduction gear-driven winch to successfully pass the 10-hour Wieselburg test!

A ROBUST BOTTOM BLADE

provides excellent anchoring and optimum stability during work.
Available in the fixed or hydraulically moveable version with a width of 2.0 m / 78.74'' or 2.3 m / 90.55''.

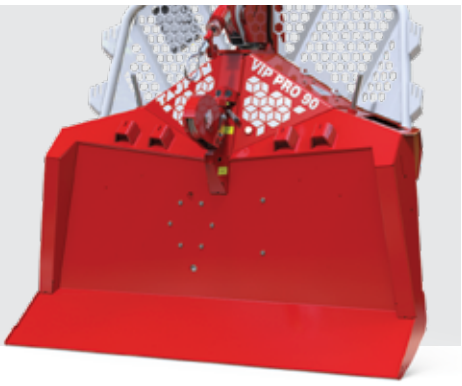

EFFICIENT HAULING OF LOGS

The main advantage of the hydraulic movable logging blade is the easier and more efficient hauling of logs.

LIMIT SWITCH

on the upper pulley with an automatic pulling switch-off function. It automatically stops when the loop reaches the wire rope guide, even if the operator has not deactivated the pulling in time. This prevents damage to the top pulley and the wire rope.

STABLE FRAME

Strong, high-quality Strenx® and Hardox® frame. All vital parts are integrated into the frame to protect against external influences.

A ROBUST AND HIGHLY-EFFICIENT REDUCTION GEAR

with oil bath, which requires minimal maintenance.

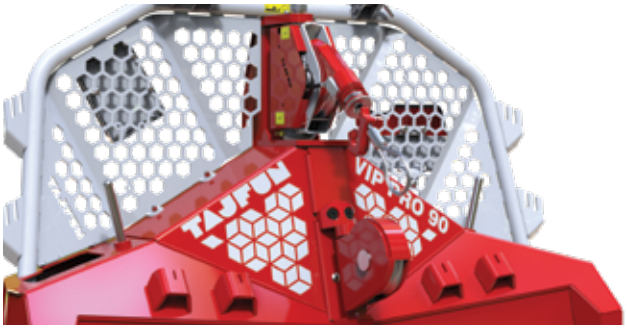

In addition to the limit switch, the upper pulley has integrated wire rope feeding mechanism and adjusting button. The mechanism is protected against mechanical damage by the pulley housing and covers.

BOTTOM PULLEY

with patented system for the quick insertion / removal of the wire rope. During transport, it is held in position by a magnet on the frame.

A tool box

with a lid and a lock ensures that the tool is not misplaced during driving and working.

WIRE ROPE

Wire rope compatibility with particular winch models and maximum wire rope lengths

are quoted in the technical data table, next to particular winch description.

Article number	Description	Diameter	Weight	Breaking Force
503453	6 S-V	Ø 9 mm / Ø 0.35"	0.453 kg/m / 0.99 lbs/Ft	92,05 kN / 20,694 lbs
503454	6 S-V	Ø 10 mm / Ø 0.40"	0.543 kg/m / 1.19 lbs/Ft	111,47 kN / 25,059 lbs
503446	6 F-V	Ø 11 mm / Ø 0.43"	0.655 kg/m / 1.44 lbs/Ft	133,28 kN / 29,962 lbs
503447	6 F-V	Ø 12 mm / Ø 0.47"	0.764 kg/m / 1.68 lbs/Ft	152,79 kN / 34,348 lbs
503448	6 F-V	Ø 13 mm / Ø 0.50"	0.881 kg/m / 1.94 lbs/Ft	180,00 kN / 40,465 lbs
503449	6 F-V	Ø 14 mm / Ø 0.55"	1.01 kg/m / 2.23 lbs/Ft	210,00 kN / 47,210 lbs
503450	6 F-V	Ø 16 mm / Ø 0.63"	1.290 kg/m / 2.78 lbs/Ft	238,98 kN / 52,650 lbs

ADDITIONAL ELEMENTS FOR WIRE ROPE

Hooks

Article number	SLIDING Slide on wire rope	Wire Rope Diameter
500079	Sliding hook	Ø 9–Ø 13 mm / Ø 0.35"–Ø 0.50"

Article number	PARALLEL Hooked to the end of wire rope	Wire Rope Diameter
500070	Parallel hook P7-8	Ø 9 mm / Ø 0.35"
500071	Parallel hook P10	Ø 10–Ø 13 mm / Ø 0.40"–Ø 0.50"
500072	Parallel hook P13	Ø 14 mm / Ø 0.55"

Ball Joints

Article number	PIVOTING, ROTATING	Wire Rope Diameter
504398	Pivoting Ball Joint - for chain lock	Ø 8–Ø 10 mm / Ø 0.31"–Ø 0.50"
504399	Pivoting Ball Joint - for chain lock	Ø 10–Ø 13 mm / Ø 0.40"–Ø 0.50"

Sliders

Article number	SIMPLE	Wire Rope Diameter
500090	Slider with chain lockPOK	Ø 13 mm– / Ø 0.50"–

Article number	ROTATING	Wire Rope Diameter
500089	Rotating slider with chain lock D7-8	–Ø 12 mm / –Ø 0.47"
504155	Rotating slider with link and chain lock D7-8	–Ø 12 mm / –Ø 0.47"

Mechanical winches

	EGV 35 A	EGV 45 A
Pulling Power	35 kN / 7,900 lbs	45 kN / 10,000 lbs
Brake Power	44 kN / 9,900 lbs	56 kN / 12,500 lbs
Gear Ratio	1 : 7.5	1 : 8.89
Rope Velocity (at Standard No of Rev. of P.T.O. Shaft 540 min^{-1} / 540 rpm)	0.63–1.19 m/s / 24.75"–46.5"/s	0.54–1.08 m/s / 21.25"–42.5"/s
Max. Drum Capacity	Ø 11 mm / 55 m / Ø 0.43" / 180'	Ø 12 mm / 61 m / Ø 0.47" / 200'
	Ø 10 mm / 68 m / Ø 0.40"/ 223'	Ø 11 mm / 78 m / Ø 0.43"/ 255'
	Ø 9 mm / 83 m / **Ø 0.35"** / 272'	Ø 10 mm / 94 m / Ø 0.43" / 308'
		Ø 9 mm / 125 m / **Ø 0.35"** / 410'
Required Tractor Capacity	11–25 kW (15–35 HP)	15–37 kW (20–50 HP)
Mounting	I, II	I, II
Bottom Pulley	✔	✔
Coupling	✔	✔
Differential Brake Band	✔	✔

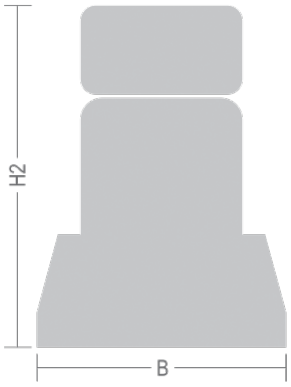

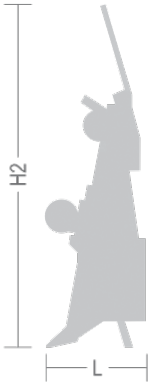

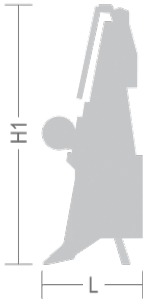

	EGV 35 A	EGV 45 A	EGV 55 A	EGV 55 A 1.8M
Width (B)	1210 mm / 48"	1400 mm / 55"	1500 mm / 60"	1800 mm / 71"
Length (L)	489 mm / 19.25"	525 mm / 21"	565 mm / 23"	565 mm / 23"
Transport Height (H1)	1266 mm / 50"	1361 mm / 54"	1600 mm / 63"	1600 mm / 63"
Overall Height (H2)	2000 mm / 79"	2300 mm / 91"	2300 mm / 91"	2300 mm / 91"
Weight Without Wire Rope	240 kg / 530 lbs	330 kg / 728 lbs	345 kg / 761 lbs	362 kg / 798 lbs

EGV 55 A	EGV 65 A	EGV 85 A
55 kN / 12,250 lbs	65 kN / 14,500 lbs	85 kN / 19,000 lbs
69 kN / 15,500 lbs	81 kN / 18,000 lbs	106 kN / 23,500 lbs
1 : 8.89	1 : 10.80	1 : 10.66
0.54–1.07 m/s / 21.25"–42.25"/s	0.50–0.99 m/s / 19.5"–38.75"/s	0.51–1.10 m/s / 20"–43"/s
Ø 13 mm / 56 m / Ø 0.50" / 183'	Ø 14 mm / 78 m / Ø 0.55" / 255'	Ø 15 mm / 86 m / Ø 0.60" / 282'
Ø 12 mm / 61 m / Ø 0.47" / 200'	Ø 13 mm / 89 m / Ø 0.50" / 291'	Ø 14 mm / 106 m / Ø 0.55" / 347'
Ø 11 mm / 78 m / Ø 0.43" / 255'	Ø 12 mm / 118 m / Ø 0.47" /387'	**Ø 13 mm** / 110 m / **Ø 0.50"** / 360'
Ø 10 mm / 95 m / **Ø 0.40"** / 311'	**Ø 11 mm** / 140 m / **Ø 0.43"** / 459'	
25–52 kW (35–70 HP)	37–66 kW (50–90 HP)	52–100 kW (70–135 HP)
I, II	II, III	II, III
✔	✔	✔
✔	✔	✔
✔	✔	✔

EGV 65 A	EGV 65 A 1.8M	EGV 85 A	EGV 85 A 1.95M	EGV 85 A 2.05M
1660 mm / 66"	1800 mm / 71"	1800 mm / 71"	1950 mm / 77"	2050 mm / 81"
670 mm / 27"	670 mm / 27"	680 mm / 27"	680 mm / 27"	680 mm / 27"
1729 mm / 69"	1729 mm / 69"	1780 mm / 70"	1780 mm / 70"	1780 mm / 70"
2300 mm / 91"	2300 mm / 91"	2300 mm / 91"	2300 mm / 91"	2300 mm / 91"
515 kg / 1,136 lbs	528 kg / 1,164 lbs	570 kg / 1,257 lbs	584 kg / 1,287 lbs	591 kg / 1,302 lbs

Hydraulic winches

	EGV 45 AHK EGV 45 AHK SG	EGV 55 AHK EGV 55 AHK SG
Pulling Power	45 kN / 10,000 lbs	55 kN / 12,250 lbs
Brake Power	56 kN / 12,500 lbs	69 kN / 15,500 lbs
Gear Ratio	1 : 8.89	1 : 8.89
Rope Velocity (at Standard No of Rev. of P.T.O. Shaft 540 min^{-1} / 540 rpm)	0.54–1.08 m/s / 21.25"–42.5"/s	0.54–1.07 m/s / 21.25"–42.25"/s
Max. Drum Capacity	Ø 12 mm / 61 m / Ø 0.47" / 200'	Ø 13 mm / 56 m / Ø 0.50" / 183'
	Ø 11 mm / 78 m / Ø 0.43" / 255'	Ø 12 mm / 61 m / Ø 0.47" / 200'
	Ø 10 mm / 94 m / Ø 0.40" / 308'	Ø 11 mm / 78 m / Ø 0.43" / 255'
	Ø 9 mm / 125 m / **Ø 0.35"** / 410'	**Ø 10 mm** / 95 m / **Ø 0.40"** / 311'
Required Tractor Capacity	15–37 kW (20–50 HP)	25–52 kW (35–70 HP)
Mounting	I, II	I, II
Bottom Pulley	✔	✔
Coupling	✔	✔
Differential Brake Band	✔	✔
Radio Remote Control	Optional	Optional
Powered Upper Pulley	EGV 45 AHK SG	EGV 55 AHK SG

	EGV 65 AHK ZS EGV 65 AHK ZS SG	DGV 2X55 AHK DGV 2X55 AHK SG DGV 2X55 AHK 1XSG
Pulling Power	65 kN / 14,500 lbs	2 x 55 kN / 2 x 12,300 lbs
Brake Power	81 kN / 18,000 lbs	2 x 69 kN / 2 x 15,500 lbs
Gear Ratio	1 : 10.80 (back)	1 : 9.06
	1 : 18.60 (front)	
Rope Velocity (at Standard No of Rev. of P.T.O. Shaft 540 min^{-1} / 540 rpm)	0.5–0.99 m/s / 9.5"–38.75"/s	0.53–1.04 m/s / 20.75" - 40.75"/s
Max. Drum Capacity	Ø 14 mm / 78 m / Ø 0.55" / 255'	Ø 13 mm / 56 m x 2 / Ø 0.50" / 183' x 2
	Ø 13 mm / 89 m / Ø 0.50" / 291'	Ø 12 mm / 61 m x 2 / Ø 0.47" / 200' x 2
	Ø 12 mm / 118 m / Ø 0.47" / 387'	Ø 11 mm / 78 m x 2 / Ø 0.43" / 255' x 2
	Ø 11 mm / 140 m / **Ø 0.43"** / 459'	**Ø 10 mm** / 95 m x 2 / **Ø 0.40"** / 311' x 2
Required Tractor Capacity	37–66 kW (50–90 HP)	59–100 kW (80–135 HP)
Mounting	II, III	II (III)
Bottom Pulley	✔	✔
Coupling	✔	
Differential Brake Band	✔	✔
Radio Remote Control	Optional	Optional
Powered Upper Pulley	EGV 65 AHK ZS SG	DGV 2X55 AHK SG and DGV 2X55 AHK 1XSGX
Operating pressure (hydraulically movable blade)		

EGV 65 AHK EGV 65 AHK SG	EGV 85 AHK EGV 85 AHK SG	EGV 105 AHK EGV 105 AHK SG
65 kN / 14,500 lbs	85 kN / 19,000 lbs	100 kN / 22,500 lbs
81 kN / 18,000 lbs	106 kN / 23,500 lbs	125 kN / 28,100 lbs
1 : 10.80	1 : 10.66	1 : 12.1
0.50–0.99 m/s / 19.5"–38.75"/s	0.51–1.10 m/s / 20"–43"/s	0.49–1.02 m/s / 19.75"–40"/s
Ø 14 mm / 78 m / Ø 0.55" / 255'	Ø 15 mm / 86 m / Ø 0.60" / 282'	Ø 18 mm / 82 m / Ø 0.70" / 269'
Ø 13 mm / 89 m / Ø 0.50" / 291'	Ø 14 mm / 106 m / Ø 0.55" / 347'	Ø 16 mm / 110 m / Ø 0.63" / 360'
Ø 12 mm / 118 m / Ø 0.47" / 387'	**Ø 13 mm** / 110 m / Ø 0.50" / 360'	Ø 15 mm / 125 m / Ø 0.60" / 410'
Ø 11 mm / 140 m / **Ø 0.43"** / 459'		**Ø 14 mm** / 130 m / **Ø 0.55"** / 426'
37–66 kW (50–90 HP)	52–100 kW (70–135 HP)	> 74 kW (> 100 HP)
II, III	II, III	III
✔	✔	✔
✔	✔	✔
✔	✔	✔
Optional	Optional	Optional
EGV 65 AHK SG	EGV 85 AHK SG	EGV 105 AHK SG

Video

VIP PRO 90

VIP PRO 90 G	VIP PRO 90 F
90 kN / 20,230 lbs	90 kN / 20,230 lbs
112.5 kN / 25,291 lbs	112.5 kN / 25,291 lbs
1 : 13.7	1 : 13.7
0.27–0.44 m/s (at 300 min^{-1}) 10.63"–17.32"/s (at 3000 rpm)	0.27–0.44 m/s (at 300 min^{-1}) 10.63"–17.32"/s (at 3000 rpm)
0.50–0.79 m/s (at 540 min^{-1}) 19.68"–31.10"/s (at 540 rpm)	0.50–0.79 m/s (at 540 min^{-1}) 19.68"–31.10"/s (at 540 rpm)
Ø 13 mm / 130 m / Ø 0.50" / 426.5'	**Ø 13 mm** / 130 m / Ø 0.50" / 426.5'
75–110 kW (100–150 HP)	75–110 kW (100–150 HP)
II, III	II, III
✔	✔
✔	✔
Optional	Optional
✔	✔
max. 200 bar / max. 2,900 psi	

	EGV 45 AHK (SG)	EGV 55 AHK (SG)	EGV 55 AHK 1.8M (SG)	EGV 65 AHK (SG)	EGV 65 AHK 1.8M (SG)
Width (B)	1400 mm / 55"	1500 mm / 60"	1800 mm / 71"	1660 mm / 66"	1800 mm / 71"
Length (L)	525 mm / 21"	565 mm / 23"	565 mm / 23"	670 mm / 27"	670 mm / 27"
Transport Height (H1)	1361 mm / 54"	1600 mm / 63"	1600 mm / 63"	1729 mm / 69"	1729 mm / 69"
Overall Height (H2)	2300 mm / 91"	2300 mm / 91"	2300 mm / 91"	2300 mm / 91"	2300 mm / 91"
Weight Without Wire Rope	350 kg / 772 lbs (357 kg / 787 lbs)	365 kg / 761 lbs (372 kg / 820 lbs)	382 kg / 842 lbs (389 kg / 858 lbs)	540 kg / 1,191 lbs (553 kg / 1,219 lbs)	553 kg /1,219 lbs (566 kg / 1,248 lbs)

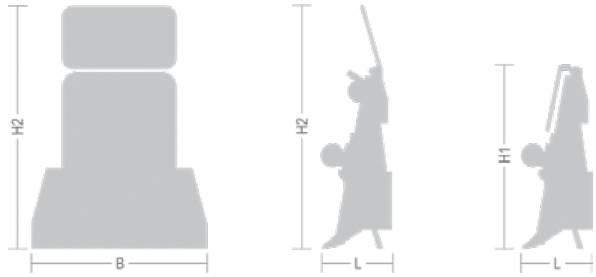

	EGV 65 AHK ZS (SG)	EGV 65 AHK ZS 1.8M (SG)	EGV 65 AHK ZS 2.05M (SG)	DGV 2X55 AHK (SG or 1XSG)
Width (B)	1660 mm / 66"	1800 mm / 71"	2050 mm / 81"	1980 mm / 78"
Length (L)	670 mm / 27"	670 mm /27"	670 mm /27"	650 mm / 26"
Transport Height (H1)	1729 mm / 68"	1729 mm / 68"	1729 mm / 68"	1750 mm / 71"
Overall Height (H2)	2300 mm / 91"	2300 mm / 91"	2300 mm /91"	2300 mm / 91"
Weight Without Wire Rope	567 kg / 1,191 lbs (580 kg / 1,279 lbs)	580 kg / 1,279 lbs (593 kg / 1,307 lbs)	598 kg / 1,318 lbs (611 kg / 1,347 lbs)	690 kg / 1,522 lbs (740 kg / 1,631 lbs or 720 kg / 1,587 lbs)

LOGGING WINCHES ACCESSORIES

Compatibility

Article number	Description	EGV 35 A	EGV 45 A	EGV 55 A	EGV 65 A	EGV 85 A
244673	BP 3 Return Drum					
241259	Fuel container holder			✔	✔	✔
246205	Fuel container holder XL	✔	✔	✔	✔	✔
205574	Chainsaw holder	✔	✔	✔	✔	✔
253123	Chain holder	✔	✔	✔	✔	✔
212150	Tajfun PS 130 Snatch Block with Load Belt 2 m / 6.6'	✔	✔	✔	✔	✔
212151	Tajfun PS 130 Snatch Block with Load Belt 3 m / 9.9'	✔	✔	✔	✔	✔
516772	Radio Remote Control Tajfun IMET M880					
516773	Radio Remote Control Tajfun IMET M880					
205274	Actuator					
205278	Throttle regulation module					
504900	P.T.O. Shaft Tajfun C Line-T 2BR+ KK560	✔	✔			
504901	P.T.O. Shaft Tajfun C Line-T 4BR+ KK560			✔	✔	
504785	P.T.O. Shaft Tajfun C Line-T 6BR+ KK560					✔
252483	Hydro Power Unit HP 25 EGV 45 + 55		✔	✔		
248124	Hydro Power Unit HP 25 EGV 65				✔	
255088	Hydro Power Unit HP 30 EGV 85					✔
263432	Skid Steer Adapter EGV SAE J2513		✔	✔	✔	✔
	Additional Accessories for Skid Steer Adapter					
263493	Set of hydraulic connections ISO16028		✔	✔	✔	✔
517695	Mechanical brake lever CAT 2 M27X3 350-550		✔	✔	✔	✔

NEW

EGV 65 AHK 2.05M (SG)	EGV 85 AHK (SG)	EGV 85 AHK 1.95M (SG)	EGV 85 AHK 2.05M (SG)	EGV 105 AHK (SG)	EGV 105 AHK 2.3M (SG)
2050 mm / 81''	1800 mm / 71''	1950 mm / 77''	2050 mm / 81''	1940 mm / 77''	2300 mm / 91''
670 mm / 27''	680 mm / 27''	680 mm / 27''	680 mm / 27''	782 mm / 31''	782 mm / 31''
1729 mm / 69''	1780 mm / 70''	1780 mm / 70''	1780 mm / 70''	1913 mm / 76''	1913 mm / 76''
2300 mm / 91''	2300 mm / 91''	2300 mm / 91''	2300 mm / 91''	2300 mm / 91''	2300 mm / 91''
571 kg / 1,259 lbs (584 kg / 1,287 lbs)	590 kg / 1,301 lbs (603 kg / 1,329 lbs)	604 kg / 1,332 lbs (617 kg / 1,360 lbs)	611 kg / 1,347 lbs (624 kg / 1,376 lbs)	800 kg / 1,764 lbs (815 kg / 1,797 lbs)	832 kg / 1834 lbs (847 kg / 1867 lbs)

DGV 2X55 AHK 2.2M (SG or 1XSG)	VIP PRO 90 G2.0M	VIP PRO 90 G2.3M	VIP PRO 90 F2.0M	VIP PRO 90 F2.3M
2200 mm / 87''	2000 mm / 78.74''	2300 mm / 90.55''	2000 mm / 78.74''	2300 mm / 90.55''
650 mm / 26''	890 mm / 35.03'' (Middle position of movable logging blade)	890 mm / 35.03''	830 mm / 32.67''	830 mm / 32.67''
1750 mm / 71''	1870 mm / 73.62''	1870 mm / 73.62''	1870 mm / 73.62''	1870 mm / 73.62''
2300 mm / 91''	2300 mm / 90.55''	2300 mm / 90.55''	2300 mm / 90.55''	2300 mm / 90.55''
707 kg / 1,559 lbs (757 kg / 1,669 lbs or 737 kg / 1,625 lbs)	930 kg / 2,050 lbs	995 kg / 2,194 lbs	860 kg / 1,895 lbs	935 kg / 2,061 lbs

EGV 45 AHK	EGV 55 AHK	EGV 65 AHK	EGV 65 AHK ZS	EGV 85 AHK	EGV 105 AHK	VIP PRO 90	DGV 2X55 AHK
✔	✔	✔		✔	✔	✔	
✔	✔	✔	✔	✔	✔	✔	✔
✔	✔	✔	✔	✔	✔	✔	✔
✔	✔	✔	✔	✔	✔	✔	
✔	✔	✔	✔	✔	✔	✔	✔
✔	✔	✔	✔	✔	✔	✔	✔
✔	✔	✔	✔	✔	✔	✔	✔
✔	✔	✔	✔	✔	✔	✔	
							✔
✔	✔	✔	✔	✔	✔	✔	✔
✔	✔	✔	✔	✔	✔	✔	✔
	✔	✔	✔				
✔				✔	✔	✔	✔
✔	✔						
		✔					
				✔			
✔	✔	✔		✔			
✔	✔	✔		✔			
✔	✔	✔		✔			

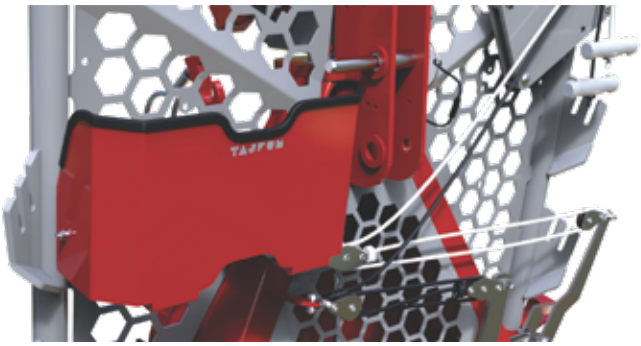

FUEL CONTAINER HOLDER

The fuel container holder can be installed on the left or right side of the safety net.

	Fuel Container Holder	Fuel Container Holder XL
Weight	3.6 kg / 8.0 lbs	3.8 kg / 8.0 lbs
Width x Length	155–188 x 343 mm 6"–7.4" x 13.5"	155–188 x 383 mm 6"–7.4" x 15"

CHAINSAW HOLDER

can be installed on the left or right side of the safety net. One winch can hold up to two holders.

Chainsaw Holder	
Weight	1.36 kg / 3.0 lbs

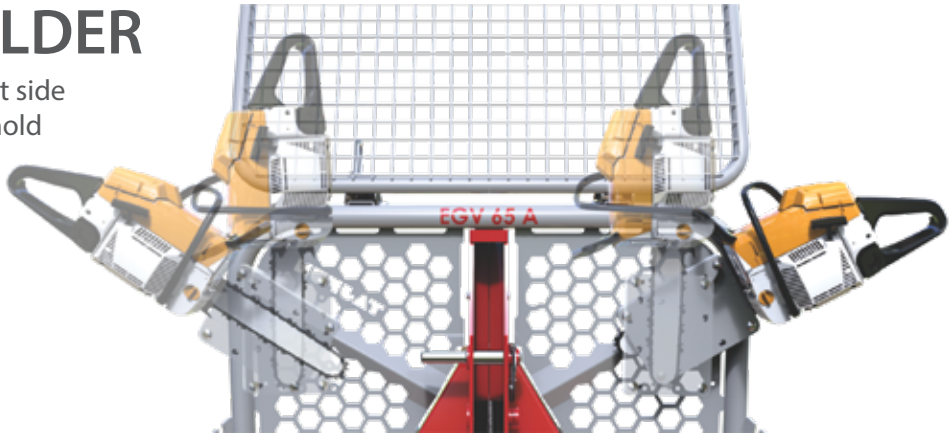

CHAIN HOLDER

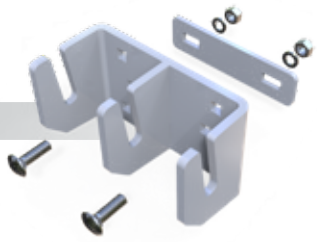

Chain holder	
Weight	1,2 kg / 2,65 lbs
Width x Length x Height	67 x 138 x 80 mm 2.6" x 5.4" x 3.1"

TAJFUN P.T.O. SHAFTS

- Easy to use, user friendly C Line connection.
- Flexible protection hood, which allows easy access to connecting mechanism and grease nipples Tajfun P.T.O. Shaft.

	Dimensions*
P.T.O. Shaft Tajfun C Line-T 2BR+ KK560	1 3/8"Z6 – 1 3/8" Z6; L_{KK} = 560
P.T.O. Shaft Tajfun C Line-T 4BR+ KK560	1 3/8"Z6 – 1 3/8" Z6; L_{KK} = 560
P.T.O. Shaft Tajfun C Line-T 6BR+ KK560	1 3/8"Z6 – 1 3/8" Z6; L_{KK} = 560

*L_{KK} – P.T.O. Shaft length between pivot points (mm), in compressed position rounded to 10 mm / 0.4"

SKID STEER ADAPTER EGV SAE J2513

For mounting Tajfun Logging Winches on Skid-steer and Compact Track Loaders

NEW

Introducing the versatile Skid Steer Adapter designed to seamlessly integrate Tajfun winches (EGV 45 A/AHK, EGV 55 A/AHK, EGV 65 A/AHK and EGV 85 A/AHK) with a range of machinery, such as Skid-steers and Compact Track Loaders. This adapter is specifically engineered to meet the stringent requirements of the SAE J2513 standard, making it compatible with leading brands such as Bobcat, CAT, Kubota, and JCB and others. To optimize the functionality and performance of winches on these machines, we recommend the use of additional equipment listed in the table below. This innovative solution ensures a secure and efficient connection, enhancing the operational capabilities of your machinery with the trusted quality of Tajfun winches.

Article number	Recomended Additional Equipment
252483	Hydro Power Unit HP 25 EGV 45 + 55
248124	Hydro Power Unit HP 25 EGV 65
255088	Hydro Power Unit HP 30 EGV 85
263493	Set of hydraulic connections ISO16028
517695	Mechanical brake lever CAT 2 M27X3 350-550

	Skid Steer Adapter EGV SAE J2513
Height	602 mm / 24"
Length	1147 mm / 45"
Width	417 mm / 16.5"
Weight	64 kg / 141 lbs

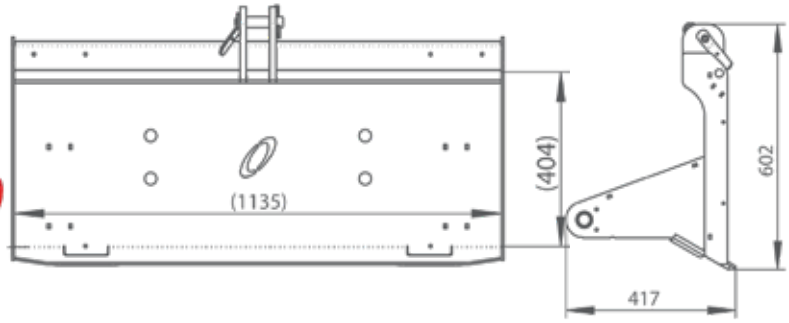

HYDRO POWER UNIT HP 25 AND HP 30

is a tractor P.T.O. drive replacement for a forestry winch.

The drive is equipped with a hydraulic motor that is attached to the frame of the forestry winch. The connection to the forestry winch is direct, without a P.T.O. shaft (cardan). This solution is ideal if no P.T.O. drive is available, only the hydraulic system of the power unit. The hydro power unit is connected to the power unit with hydraulic hoses, and power is guaranteed. The unit includes a meter showing the number of rpm and the working hours.

	Hydro Power Unit HP 25 EGV 45 + 55	Hydro Power Unit HP 25 EGV 65	Hydro Power Unit HP 30 EGV 85*
Oil flow	70–80 l/min / 20 gal/min	70–80 l/min / 20 gal/min	80–90 l/min / 21–24 gal/min
Max. pressure	210 bar / 2900 psi	210 bar / 2900 psi	240 bar / 3481 psi
Output speed	300 min^{-1} / 300 rpm	300 min^{-1}/ 300 rpm	300 min^{-1}/ 300 rpm
Power	25 kW (33 HP)	25 kW (33 HP)	30 kW (40 PS)
Weight	20 kg / 44 lbs	20 kg / 44 lbs	34 kg / 75 lbs

*Suitable only for sufficient working pressure and oil flow. Hydraulic systems of tractors usually do not meet these conditions

TAJFUN PS 130 SNATCH BLOCK

- High load capacity.
- Easy operation even under the roughest conditions.
- Low weight and small size compared to existing snatch blocks (light construction).
- SMART lock, which allows fast and simple pulley side opening.
- Combination of user friendly top quality materials.
- Modern innovative design.

	TAJFUN PS 130 Snatch Block with Load Belt 2 m / 6.6'	TAJFUN PS 130 Snatch Block with Load Belt 3 m / 9.9'
Load Capacity	130 kN / 29,200 lbs	130 kN / 29,200 lbs
Break Force	140 kN / 58,450 lbs	140 kN / 58,450 lbs
Weight	2.55 kg / 5 lbs	2.55 kg / 5 lbs
Length	2 m / 6.6'	3 m / 9.9'
Load Capacity	140 kN / 30,865 lbs	140 kN / 30,865 lbs
Weight of the Package (Snatch Block and Load Belt)	3.5 kg / 7.7 lbs	4.4 kg / 9.7 lbs

LOAD BELT

Especially designed for operation with TAJFUN PS 130 snatch blocks and logging winches.

AVAILABLE AS A PACKAGE

Snatch Block and Load Belt

RADIO REMOTE CONTROL TAJFUN IMET M880,

an important tool for working with winches.

It is designed for particularly difficult working conditions and multifunctional use – operation of single-drum or twin-drum winches. Ergonomically designed, the control panel makes your work easy while handling remains accurate even with gloves on.

Professional radio remote control

- The Tajfun IMET M880 complies with the latest ISO 13849-1:2006 and EN 17067: 2019 Machinery Safety Standard.
- Large control panel.
- Robust high-strength plastic housing.
- 2 removable rechargeable batteries with fast charger.
- Two way radio technology.
- 2 years manufacturer's warranty, including a transmitter, receiver, 2 removable NiMH batteries, a quick battery charger, an ergonomic belt, a mounting bracket for the receiver, a set of fuses and user manuals.

Tajfun IMET M880	
Frequency Band	434,000 MHz
Transmission Capacity	10 mW e.r.p.
Modulation Type	Half duplex
Operating temperature range	between –25 °C / 13 °F and +70 °C / 158 °F
Storage temperature range	between –40 °C / 40 °F and + 85 °C / 185 °F
STOP Switch	PLe Cat.4 (ISO 13849-1:2006 6.2.7 architecture)
Other switches	PLc Cat.2 (ISO 13849-1:2006 6.2.5 architecture)
Transmitter	
Power supply	NiMH–Rechargeable Batteries 3.6 V– 2.2 Ah
Housing	UL94 HB reinforced with nylon fibers
Protection Type	IP 65
Height x Width x Length	143 x 80 x 140 mm / 5.7" x 3.1" x 5.5"
Weight	667 g / 1.47 lbs
Battery autonomy at 20 °C	~ 22 hours (continuous operation)
Range	Up to 100 m / 328' (in a forest) to 250 m / 820' (open field)
Antenna	Integrated
Receiver	
Power supply	11÷30 Vdc
Housing	20 x MOSFET, 8x analogue, 2x safety, 2x service
Protection Type	IP 66
Height x Width x Length	140 x 65 x 230 mm / 5.5" x 2.6" x 9.05"
Weight	1700 g / 3.74 lbs
Antenna	Optional Integrated – Outside Connection
Connection	EGV 2 x 7P plug, DGV 13P plug

ACTUATOR

- Compact Construction
- Robust and Reliable
- Designed for Work in Difficult Environments
- High load capacity
- Greased for Life
- Light, Durable and Corrosion Resistive

Actuator	
Model	CAHB – 10
Tensile Strength	up to 1.000 N / 220.5 lbs
Static Strength	2.500 N / 551 lbs
Speed (Full Strength)	up to 45 mm/s / 1.75"/s
Log Length	50–300 mm / 2"–11.75"
Voltage	12 or 24 V DC
Temperature Range	–40 to +85 °C / 40 °F to +185 °F
Protection Type	IP 66

THROTTLE REGULATION MODULE PGS01

Throttle regulation module is designed for installation into newer tractor models, equipped with proportional (electronic) engine revolution control. By simultaneous use of the module and radio remote control (with step-less gas function) the system allows engine revolution control. With commands „Gas +“ or „Gas -“ on the radio remote control, module directly controls the electronic tractor engine speed. Module offers versatile use, since it also allows voltage and electric current control.

BP 3 RETURN DRUM

serves as a complement to the performance of forestry winches (hydraulic). It is mounted onto a winch or a floor base (optional).

- Electro-hydraulic control
- Sensor for activating wire rope feed
- Radio remote control (optional)
- Corresponding guide pulleys (4 pieces) and load strips (4 pieces)
- Floor base and quick couplers for disconnecting the return drum (optional)
- Swingarm with manual winch (optional)

BP 3 Return Drum	
Pulling Power	3 kN / 675 lbs
Drive	Tractor hydraulics – hydromotor
Oil flow	50–60 l/min / 13–16 gal/min
Pressure (max)	140 bar / 2030 psi
Wire rope speed (at 50 l/min)	2.34–2.91 m/s / 8–10'/s
Wire rope speed (at 60 l/min)	2.87–3.57 m/s / 9–12'/s
Weight (with wire rope – Ø 4 mm/400 m)	110 kg / 243 lbs
Length of wire rope (max)	Ø 4 mm / 400 m / Ø 0.16" / 1312'
Width	310 mm / 12"
Length	420 mm / 17"
Height	485 mm / 19"

BP 3 RETURN DRUM OPERATING

The wire rope of the return drum is routed around the hauling route by means of dedicated pulleys, which are mounted on the surrounding trees. With a return drum, the wire rope is pulled out quickly and effortlessly from the main winch to the desired location. This type of system requires two operators. One controls the system with a control console or a remote controller (optional) and releases the logs at the main winch, while the other operator secures the logs at the other end of the route.

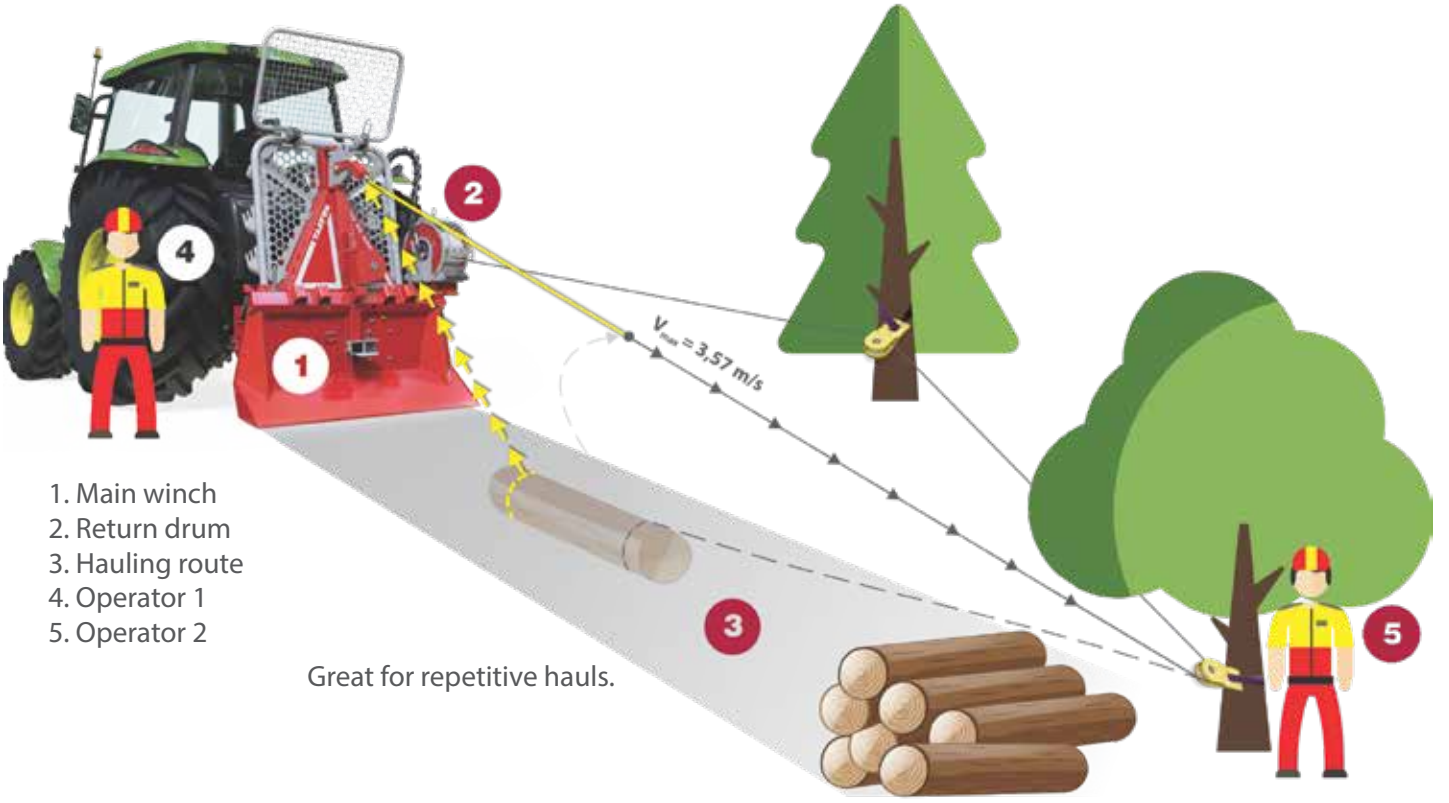

1. Main winch
2. Return drum
3. Hauling route
4. Operator 1
5. Operator 2

Great for repetitive hauls.

The BP 3 return drum and the hydraulic forestry winch can be controlled using the DGV control console or radio remote control unit DGV, Tajfun IMET M880.

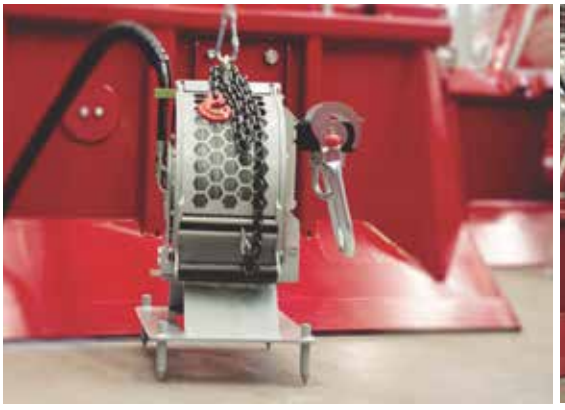

FLOOR BASE

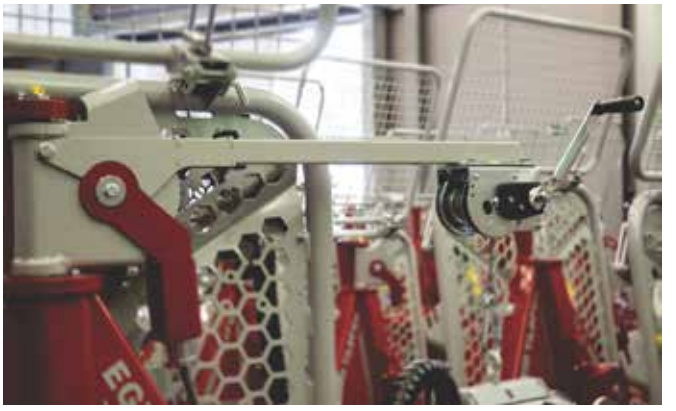

SWINGARM
with manual winch

Hydraulic cranes for tractors are also available with an integrated bio-oil.

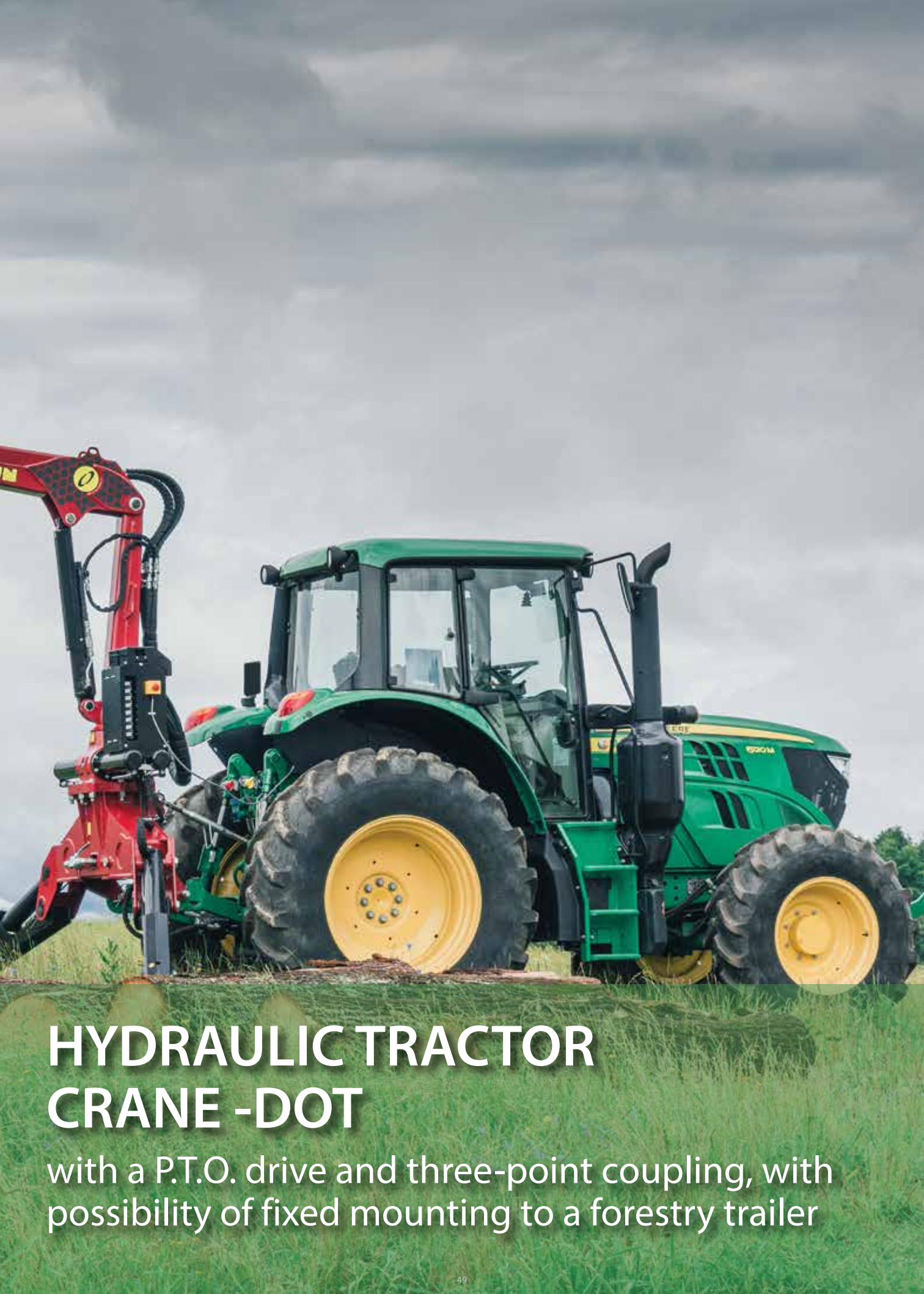

HYDRAULIC TRACTOR CRANE -DOT

with a P.T.O. drive and three-point coupling, with possibility of fixed mounting to a forestry trailer

HYDRAULIC TRACTOR CRANES DOT

A FOUR-JOINT »K« MECHANISM

on the restraint between the lifting and the swinging arm provides for excellent work characteristics of the crane.

K CRANES

- Crane with its own hydraulic system (DOT 50K, DOT 55K 85)
- With a P.T.O. drive (does not apply for DOT 40K) three-point coupling of category III
- The possibility of fixed mounting to a forestry trailer
- Oil reservoir integrated into the base (DOT 50K, DOT 55K 85)
- Excellent kinematics of the crankshaft mechanism
- More control options

TRACTOR CRANE'S DOT COLUMN

is welded on the base with butt weld, brushed and checked with ultrasound. This type of weld is of the highest quality and enables the column to react as it is made of one piece. This modern construction is slim, however not under dimensional and enables better crane resistance to dynamic load.

ROBUST STABILIZER LEGS

ensure a stable setting even on an uneven work terrain. Stabilizer cylinders with integrated brake valves.

INTEGRATED HYDRAULIC HOSES

All hydraulic hoses integrated into the lifting arm and swingarm. Thus, they are optimally protected both during work and against weather influences.

Pressure and return filter for ensuring the required purity of oil in the hydraulic system.

A robust turning system with rack and two cylinders (DOT 40K) and with two racks and four cylinders(DOT 50K, DOT 55K 85, DOT 50ZK).

Lifting cylinder protection

PATENTED ZK MECHANISM

on the restraint between the lifting and the swinging arm provides for excellent work characteristics of the crane.

ZK CRANES

- Crane with its own hydraulic system
- Oil reservoir integrated into the base
- P.T.O. drive and three-point coupling of category II or III
- The possibility of fixed mounting to a forestry trailer
- Optimal installation space in connection with the transport position
- Two stage telescope with integrated hydraulic hoses in cranes arm
- Excellent kinematics of the crankshaft mechanism
- More control options

INCREASED REACH

A special version of the telescoping arm (two stage telescoping arm at DOT 55K 85 and DOT 50ZK) for increased reach.

HYDRAULIC PUMP

Based on hydraulic crane mounting we can choose between two hydraulic pumps couplings. The pump with female coupling enables three point hitch tractor mounting. The pump with male coupling enables fixed forestry trailer mounting.

Pump (using female connection) for direct three-point connection to the tractor

Pump (using male connection) for fixed mounting on a trailer

SEAT MODUL WITH MECHANICAL CONTROL

Seat module on the crane column enables the operator to have transparent and safe operation. Comfortable seat with armrests enables the operator to easily reach all control levers. The seat is resistant to all weather conditions.

ALONG WITH TAJFUN GAP

The possibility of fixed mounting to a forestry trailer

		DOT 40K	DOT 50K
Tm	Net lifting torque	41 kNm / 30241 ft.lbs	52 kNm / 38355 ft.lbs
Tm	Gross lifting torque	52 kNm / 38355 ft.lbs	66 kNm / 48679 ft.lbs
	Slewing angle	390°	390°
	P.T.O. Shaft Speed		from 400 min^{-1} to 600 min^{-1} / 400 rpm to 600 rpm
	Drive	Tractor hydraulics – hydromotor	
Q	Pump capacity	min 40 l/min / to 10 gal/min	from 48 l/min (at 400 min^{-1} on P.T.O. Shaft) from 10.5 gal/min (P.T.O. Shaft speed 400 rpm)
			to 71 l/min (at 600 min^{-1} on P.T.O. Shaft) to 18 gal/min (P.T.O. Shaft speed 600 rpm)
	Working pressure	180 bar or 215 bar / 2610 psi or 3117 psi	230 bar / 3335 psi
max	Max. reach	7100 mm / 23.3'	7180 mm / 23.5'
	Net slewing torque	10 kNm / 7375 ft.lbs*	19 kNm / 14014 ft.lbs
	Telescopic boom length	1800 mm / 5.9'	1800 mm / 5.9'
	Crane without underframe and control	650 kg / 1433 lbs	780 kg / 1720 lbs
	Grapple with rotator GO-022 (standard equipment)	135 kg / 805 lbs	135 kg / 805 lbs
	Grapple with rotator GO-026X (optional equipment)	194 kg / 298 lbs	194 kg / 298 lbs
	Crane with base, control, grapple GO-022 and rotator	1100 kg / 2425 lbs	1450 kg / 3196 lbs

*Net slewing torque with two additional cylinders for DOT 40K = 19 kNm

DOT 40K has a one-stage telescope boom with 7.1 m / 23.3' of reach

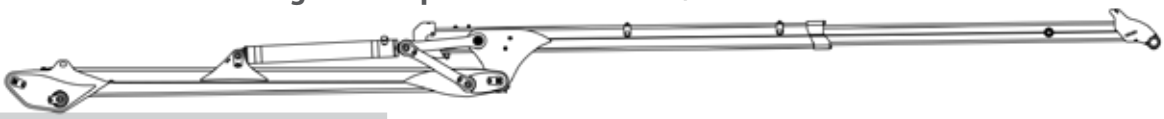

DOT 40K		m / ft	3 / 10	4 / 13	5 / 16.5	6 / 20	7 / 23
	at 180 bar / 2610 psi	kg / lbs	1150 / 2535	870 / 1918	690 / 1521	570 / 1256	460 / 1014
	at 215 bar / 3117 psi	kg / lbs	1380 / 3042	1050 / 2314	830 / 1829	690 / 1521	570 / 1256

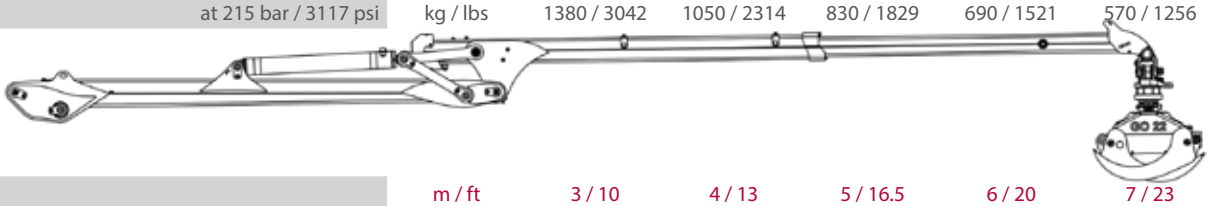

		m / ft	3 / 10	4 / 13	5 / 16.5	6 / 20	7 / 23
DOT 40K at 180 bar / 2610 psi	GO-022*	kg / lbs	1025 / 2259	745 / 1642	565 / 1245	445 / 981	335 / 738
	GO-026X*	kg / lbs	965 / 2127	685 / 1510	505 / 1113	385 / 848	275 / 606
DOT 40K at 215 bar / 3117 psi	GO-022*	kg / lbs	1255 / 2766	925 / 2039	705 / 1554	565 / 1245	445 / 981
	GO-026X*	kg / lbs	1195 / 2634	865 / 1906	645 / 1421	505 / 1113	385 / 848

DOT 50K has a one-stage telescope boom with 7.18 m / 23.5' of reach

DOT 50K		m / ft	4 / 13	5 / 16.5	6 / 20	7 / 23
	at 230 bar	kg / lbs	1330 / 2932	1060 / 2336	870 / 1918	710 / 1565

DOT 50K		m / ft	4 / 13	5 / 16.5	6 / 20	7 / 23
DOT 50K at 230 bar / 3335 psi	GO-022*	kg / lbs	1205 / 2656	935 / 2061	745 / 1642	585 / 1289
	GO-026X*	kg / lbs	1145 / 2524	875 / 1929	685 / 1510	525 / 1157

*Rotator GR-463 included

DOT 55K 85	DOT 50ZK
57 kNm / 42041 ft.lbs	50 kNm / 36878 ft.lbs
74 kNm / 54579 ft.lbs	68 kNm / 50154 ft.lbs
390°	350°
from 400 min^{-1} to 600 min^{-1}/ 400 rpm to 600 rpm	from 400 min^{-1} to 600 min^{-1}/ 400 rpm to 600 rpm
from 48 l/min (at 400 min^{-1} on P.T.O. Shaft) from 10.5 gal/min (P.T.O. Shaft speed 400 rpm)	from 48 l/min (at 400 min^{-1} on P.T.O. Shaft) from 10.5 gal/min (P.T.O. Shaft speed 400 rpm)
to 71 l/min (at 600 min^{-1} on P.T.O. Shaft) to 18 gal/min (P.T.O. Shaft speed 600 rpm)	to 71 l/min (at 600 min^{-1} on P.T.O. Shaft) to 18 gal/min (P.T.O. Shaft speed 600 rpm)
230 bar / 3335 psi	230 bar / 3335 psi
8500 mm / 27.9'	8600 mm / 28.2'
19 kNm / 14014 ft.lbs	19 kNm / 14014 ft.lbs
3200 mm / 10.5'; cylinder stroke 1600 mm / 5.3'	3200 mm / 10.5'
900 kg / 1984 lbs	1000 kg / 2204 lbs
135 kg / 805 lbs	135 kg / 805 lbs
194 kg / 298 lbs	194 kg / 298 lbs
1570 kg / 3461 lbs	1700 kg / 3747 lbs

DOT 55K has a two-stage telescope boom with an increased 8.5 m / 27.9' of reach

DOT 55K	at 230 bar / 3335 psi	m / ft	4 / 13	5 / 16.5	6 / 20	7 / 23	8 / 26	8.5 / 27.5
		kg / lbs	1500 / 3307	1170 / 2579	970 / 2138	820 / 1807	700 / 1543	550 / 1212

DOT 55K at 230 bar / 3335 psi		m / ft	4 / 13	5 / 16.5	6 / 20	7 / 23	8 / 26	8.5 / 27.5
	GO-022*	kg / lbs	1365 / 3009	1035 / 2281	835 / 1840	685 / 1510	565 / 1245	415 / 914
	GO-026X*	kg / lbs	1306 / 2879	976 / 2151	776 / 1710	626 / 1380	506 / 1115	356 / 784

DOT 50ZK has a two-stage telescope boom with 8.6 m / 28.2' of reach

DOT 50ZK at 230 bar / 3335 psi	m / ft	4 / 13	5 / 16.5	6 / 20	7 / 23	8 / 26	8.6 / 28
	kg / lbs	1250 / 2755	1002 / 2209	805 / 1774	655 / 1444	560 / 1234	

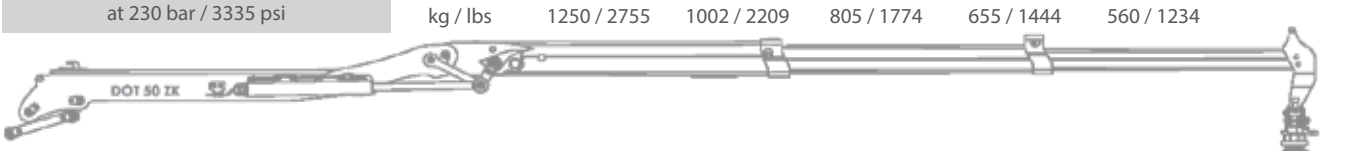

DOT 50ZK at 230 bar / 3335 psi		m / ft	4 / 13	5 / 16.5	6 / 20	7 / 23	8 / 26	8.6 / 28
	GO-022 *	kg / lbs	1125 / 2480	877 / 1933	680 / 1499	530 / 1168	435 / 959	
	GO-026X*	kg / lbs	1065 / 2348	817 / 1801	620 / 1366	470 / 1036	375 / 826	

*Rotator GR-463 included

NEW

DOT 45K

Net lifting torque	45 kNm / 33190 ft.lbs
Gross lifting torque	55 kNm / 40566 ft.lbs
Slewing angle	390°
P.T.O. Shaft Speed	from 400 min^{-1} to 600 min^{-1}/ 400 rpm to 600 rpm (In the case of the crane version with its own hydraulic system - not possible with underframe "A")
Drive	Tractor hydraulics – hydromotor
Pump capacity	min 40 l/min / to 10 gal/min
Working pressure	180 bar or 215 bar / 2610 psi or 3117 psi
Max. reach	8200 mm / 26.9'
Net slewing torque	10 kNm / 7375 ft.lbs (Net slewing torque with two additional cylinders19 kNm / 14014 ft.lbs)
Telescopic boom length	2900 mm / 9.5'
Crane without underframe and control	750 kg / 1653 lbs
Grapple with rotator GO-022 (standard equipment)	135 kg / 805 lbs
Grapple with rotator GO-026X (optional equipment)	194 kg / 298 lbs
Crane with base, control, grapple GO-022 and rotator	1200 kg / 2645 lbs

Forestry crane DOT 45K has a two-stage telescope boom with 8,2 m / 26.90' of reach.

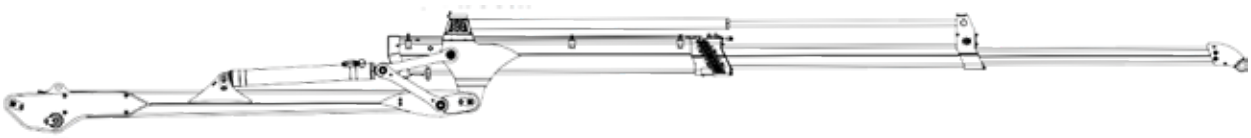

		m / ft	3 / 10	4 / 13	5 / 16.5	6 / 20	7 / 23	8 / 26
DOT 45K	at 180 bar / 2610 psi	kg / lbs	1340 / 2954	990 / 2183	780 / 1720	645 / 1421	540 / 1190	470 / 1036
	at 215 bar / 3117 psi	kg / lbs	1650 / 3638	1230 / 2712	980 / 2161	810 / 1785	680 / 1499	570 / 1257

		m / ft	3 / 10	4 / 13	5 / 16.5	6 / 20	7 / 23	8 / 26
DOT 45K	GO-022*	kg / lbs	1205 / 2657	855 / 1885	645 / 1421	510 / 1124	405 / 893	335 / 739
at 180 bar / 2610 psi	GO-026X*	kg / lbs	1146 / 2526	796 / 1754	586 / 1291	451 / 995	346 / 763	276 / 608
DOT 45K	GO-022*	kg / lbs	1205 / 2657	1095 / 2414	845 / 1863	675 / 1488	545 / 1202	435 / 959
at 215 bar / 3117 psi	GO-026X*	kg / lbs	1456 / 3210	1036 / 2283	786 / 1732	616 / 1359	486 / 1072	376 / 829

*Rotator GR-463 included

DOT 95K

NEW

	96 kNm / 70805 ft.lbs
	120 kNm / 88506 ft.lbs
	390°
	from 400 min^{-1} to 600 min^{-1}/ 400 rpm to 600 rpm
	from 80 l/min (at 400 min^{-1} on P.T.O. Shaft) from 21.13 gal/min (P.T.O. Shaft speed 400 rpm)
	to 120 l/min (at 600 min^{-1} on P.T.O. Shaft) to 31.70 gal/min (P.T.O. Shaft speed 600 rpm)
	230 bar / 3335 psi
	10264 mm / 33.69'
	31 kNm / 22865 ft.lbs
	4000 mm / 13.3'
	1215 kg / 2678.61 lbs
	135 kg / 805 lbs
	194 kg / 298 lbs
	1854 kg / 4087.37 lbs

Forest crane DOT 95K has a two-stage telescope boom with 10,26 m / 33.67′ of reach.

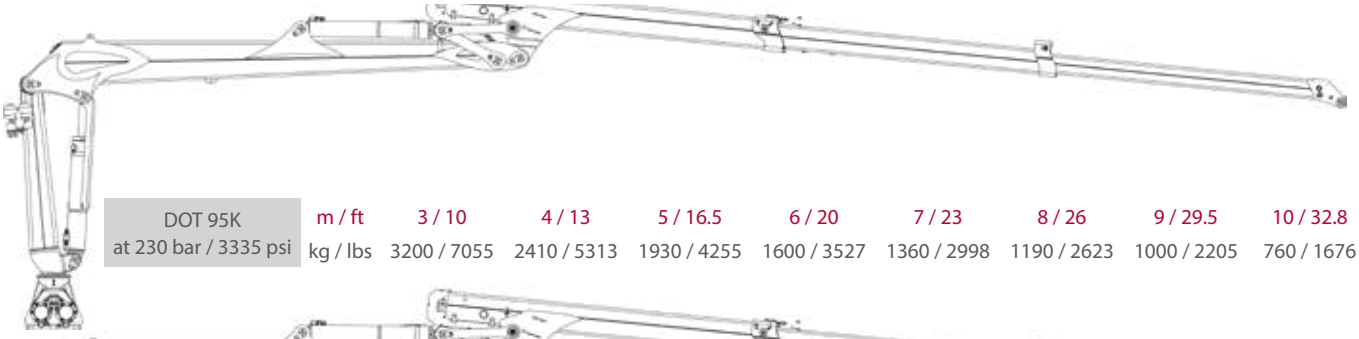

DOT 95K at 230 bar / 3335 psi	m / ft	3 / 10	4 / 13	5 / 16.5	6 / 20	7 / 23	8 / 26	9 / 29.5	10 / 32.8
	kg / lbs	3200 / 7055	2410 / 5313	1930 / 4255	1600 / 3527	1360 / 2998	1190 / 2623	1000 / 2205	760 / 1676

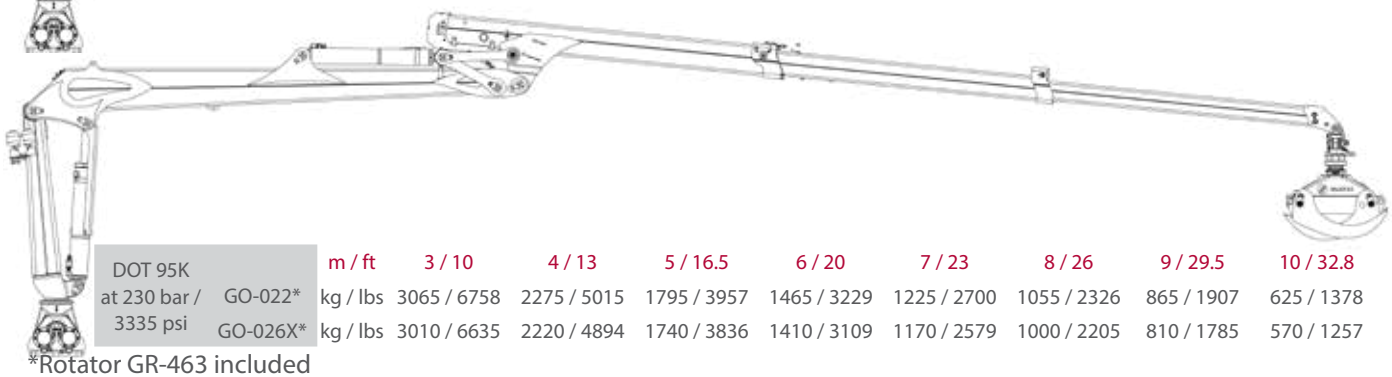

DOT 95K at 230 bar / 3335 psi		m / ft	3 / 10	4 / 13	5 / 16.5	6 / 20	7 / 23	8 / 26	9 / 29.5	10 / 32.8
	GO-022*	kg / lbs	3065 / 6758	2275 / 5015	1795 / 3957	1465 / 3229	1225 / 2700	1055 / 2326	865 / 1907	625 / 1378
	GO-026X*	kg / lbs	3010 / 6635	2220 / 4894	1740 / 3836	1410 / 3109	1170 / 2579	1000 / 2205	810 / 1785	570 / 1257

*Rotator GR-463 included

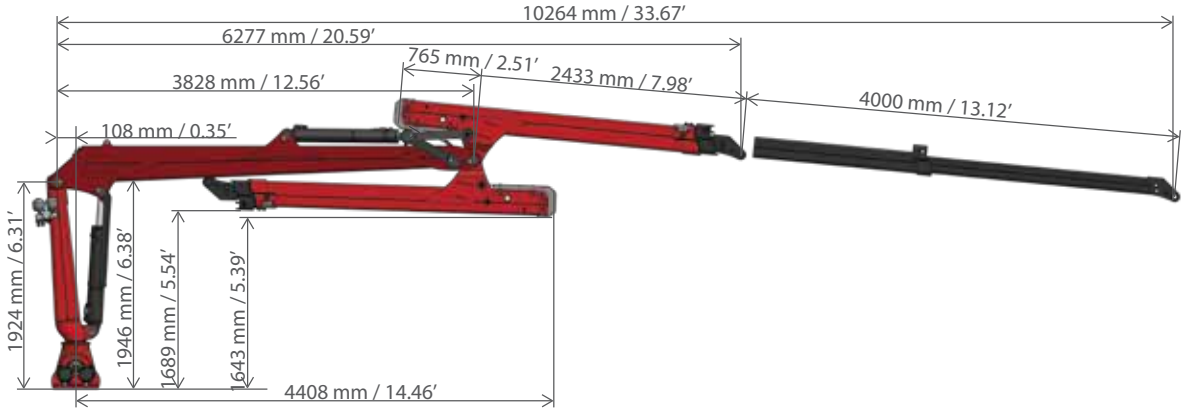

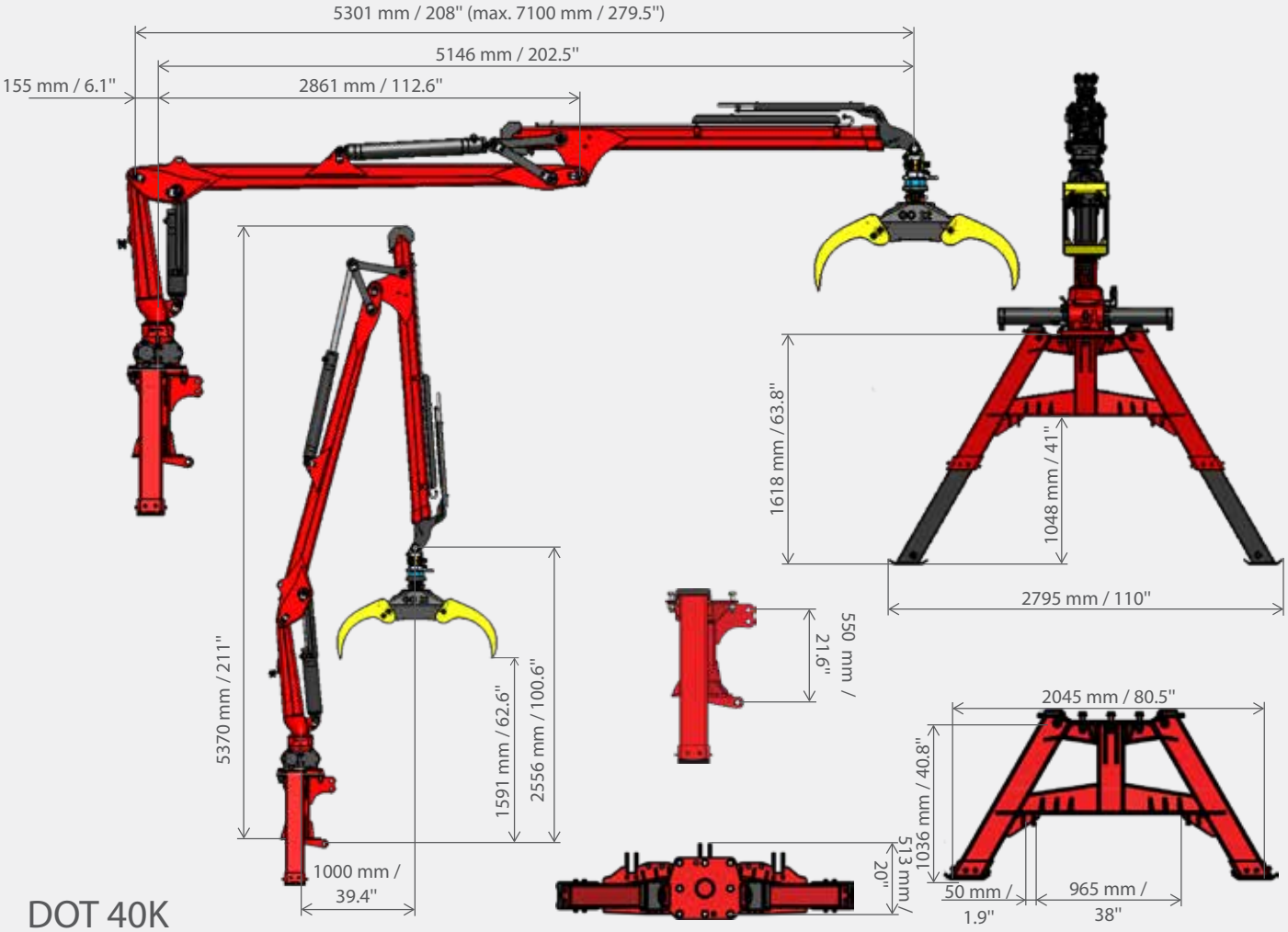

DOT 40K

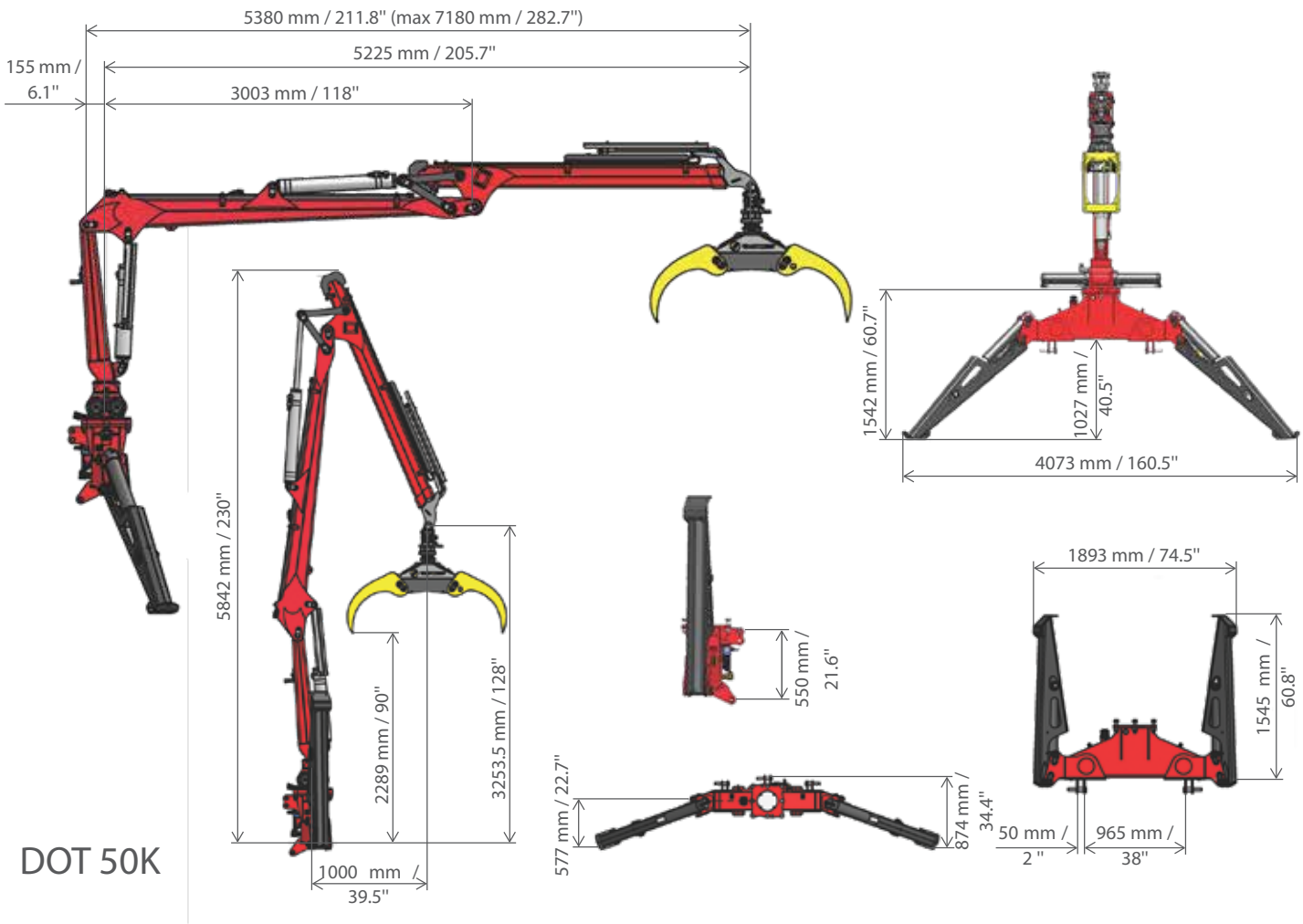

DOT 50K

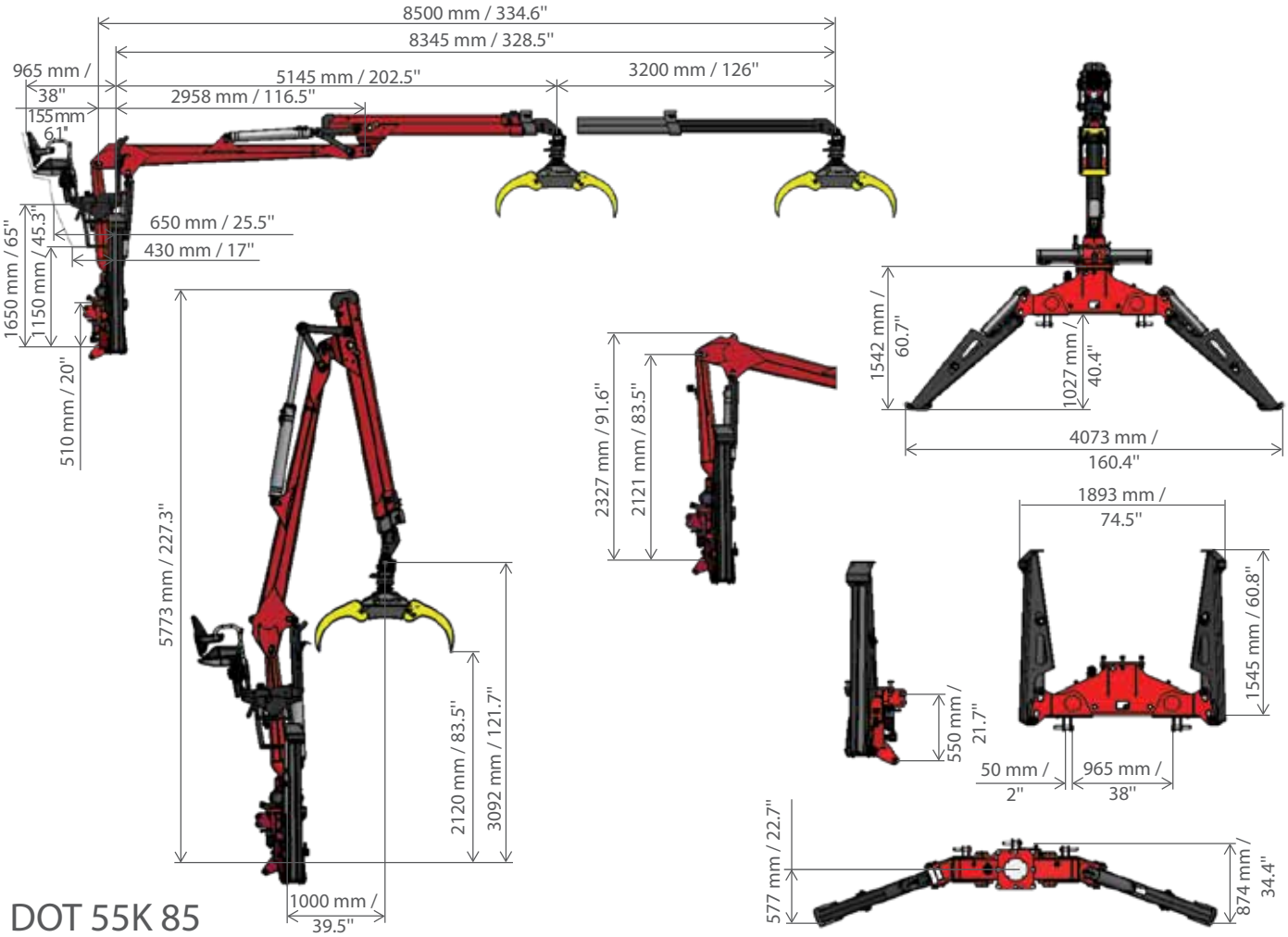

DOT 55K 85

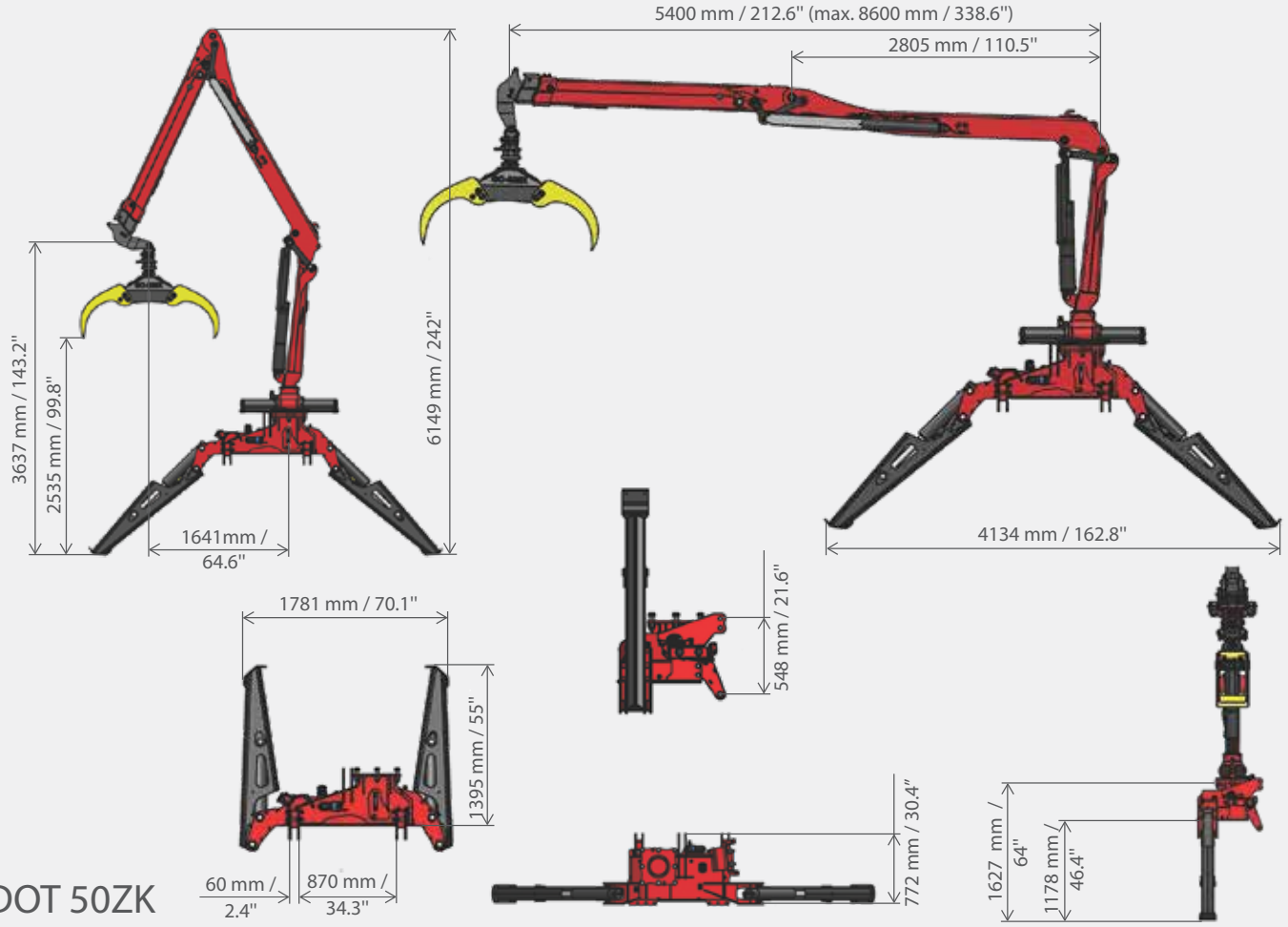

DOT 50ZK

DOT 45K

5166 mm / 16.95′ (max. 8200 mm / 26.90′)
5011 mm / 16.44′
155 mm / 0.51′
2861 mm / 9.38′

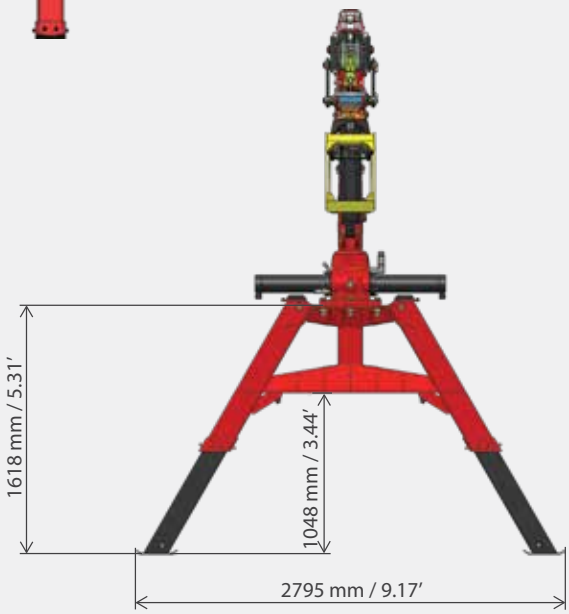
1618 mm / 5.31′
1048 mm / 3.44′
2795 mm / 9.17′

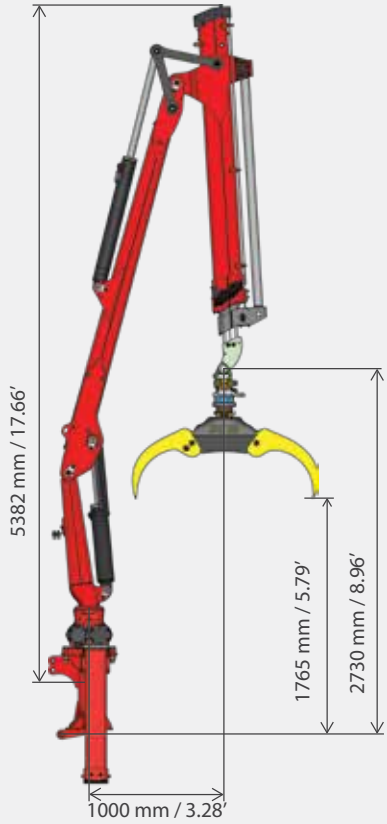
5382 mm / 17.66′
1765 mm / 5.79′
2730 mm / 8.96′
1000 mm / 3.28′

DOT 45K

WE CUSTOMIZE THE CRANE INSTALLATION TO MEET YOUR SPECIFIC NEEDS

DOT EQUIPMENT and ACCESSORIES Compatibility

Article number	Description	DOT 40K
260357	Underframe "A" with stabilizers DOT 40K / DOT 45K, tractor`s hydraulic (option also with GAP 90)	✔
262520	Underframe "flap down" with stabilizers DOT 40K / DOT 45K (option also with GAP 90)	✔
265713	Underframe "flap down" with stabilizers DOT 40K / DOT 45K (without connecting eyelets)	✔
240083	Underframe with stabilizers including connecting eyelets DOT 50K / DOT 55K	
247070	Underframe "flap down" with stabilizers DOT 50K / DOT 55K (without connecting eyelets)	
250423	Underframe with stabilizers to connect DOT 50K / DOT 55K for GAP	
252729	Underframe with stabilizers including connecting eyelets DOT 50ZK	
249877	Underframe with stabilizers to connect DOT 50ZK on GAP	
265659	Underframe "flap down" with stabilizers DOT 95K	
260767	Oil tank 110 l	✔
260767	Mechanical control (EURO two lever EURO control)	
244412	Mechanical control (EURO two lever EURO control)	
258835	Mechanical control (EURO two lever EURO control)	
253233	Mechanical control (EURO two lever EURO control)	
265661	Mechanical "flow sharing" control (2 handle Euro forestry crane control) DOT 95K	
260768	Mechanical control with 2 electric ON-OFF valves 3.1 m / 10.2'	✔
244415	Mechanical control with 2 electric ON-OFF valves 3.1 m / 10.2'	
258836	Mechanical control with 2 electric ON-OFF valves 3.1 m / 10.2'	
253234	Mechanical control with 2 electric ON-OFF valves 3.1 m / 10.2'	
265662	Mechanical "flow sharing" control with 2 electric on-off valves 3,1 m / 10.2' DOT 95K	
260769	Mechanical control with 2 electric ON-OFF valves 4.5 m / 14.8'	✔
250945	Mechanical control with 2 electric ON-OFF valves 4.5 m / 14.8'	
265663	Mechanical "flow sharing" control with 2 electric on-off valves 4,5 m / 14.8', DOT 95K	
264220	Mechanical control without oil 4.5 m, DOT 50K	
258837	Mechanical control with 2 electric ON-OFF valves 4.5 m / 14.8'	
264226	Mechanical control without oil 4.5 m, DOT 55K	
253238	Mechanical control with 2 electric ON-OFF valves 4.5 m / 14.8'	
264192	Mechanical control without pump 4.5 m (tractor steering) DOT 40K with GAP 90	✔
261080	Electro-proportional control Danfoss (only hydraulic block)	✔
260770	Electro-proportional control Danfoss with console and 2 joysticks	✔
253203	Electro-proportional control Danfoss (only hydraulic block)	
253262	Electro-proportional control Danfos with console and 2 joysticks	
258807	Electro-proportional control Danfoss (only hydraulic block)	
258817	Electro-proportional control Danfoss with console and 2 joysticks	
253235	Electro-proportional control Danfoss (only hydraulic block)	
253236	Electro-proportional control with console and 2 joysticks	
260772	Electro-proportional control Danfoss with 2 separate joysticks	✔
253249	Electro-proportional control Danfoss with 2 separate joysticks	
258825	Electro-proportional control Danfoss with 2 separate joysticks	
265664	Electro-proportional "flow sharing" control with console and 2 mini joysticks, DOT 95K	
265666	Electro-proportional "flow sharing" control with 2 separate joysticks, DOT 95K	
253630	Electro-proportional control Danfoss with 2 separate joysticks	
260771	Electro-proportional control Danfoss with radio remote control Scanreco	✔
253268	Electro-proportional control Danfoss with radio remote control Scanreco	
258826	Electro-proportional control Danfoss with radio remote control Scanreco	
253237	Electro-proportional control Danfoss with radio remote control Scanreco	
265665	Electro-proportional "flow sharing" control with radio remote control, DOT 95K	
262545	Controller DOT DANFOSS DEK + OPUS (option with 260770)	✔
254755	Seat with mechanical control F 1x ladder (2 H, 2 P)	

DOT 45K	DOT 50K	DOT 55K 85	DOT 50ZK	DOT 95K
✓				
✓				
✓				
	✓	✓		
	✓	✓		
	✓	✓		
			✓	
			✓	
				✓
✓				✓
	✓			
		✓		
			✓	
				✓
✓				
	✓			
		✓		
			✓	
				✓
✓				
	✓			
				✓
	✓			
		✓		
		✓		
			✓	
✓				
✓				
✓				
	✓			
	✓			
		✓		
		✓		
			✓	
			✓	
✓				
	✓			
		✓		
				✓
				✓
			✓	
✓				
	✓			
		✓		
			✓	
				✓
✓	✓	✓	✓	
	✓			

Article number	Description	DOT 40K
258838	Seat with mechanical control F 1x ladder (2 H, 2 P)	
255025	Seat with mechanical control F 2x ladder (2 H, 2 P)	
248414	Pump (using female connection) for direct three-point connection to the tractor	✔ (not possible with 260357)
248418	Pump (using male connection) for fixed mounting on a trailer	✔ (not possible with 260357)
257629	Danfoss LS connection pipe set	✔
257919	Danfoss LS connection pipe set oil-free	✔ (not possible with 260357)
264148	LS tube connection SET Danfoss - GAP	✔
264153	LS tube connection SET Danfoss - GAP without hydraulic oil	✔ (not possible with260357)
261895	BIO Divinol HE 46 Hydraulic Oil	✔ (with 260357)
257918	BIO Divinol HE 46 Hydraulic Oil	✔ (with 262520)
260773	Grapple GO-022 with rotator GR463 and Joint	✔
260774	Grapple GO-022 with rotator GR463 and Joint incl. brake	✔
260775	Grapple GO-026X with rotator GR463 and Joint	✔
260776	Grapple GO-026X with rotator GR463 and Joint incl. brake	✔
251065	Grapple GO-022 with rotator GR463 and Joint	
250860	Grapple GO-022 with rotator GR463 and Joint incl. brake	
250870	Grapple GO-026X with rotator GR463 and Joint	
250873	Grapple GO-026X with rotator GR463 and Joint incl. brake	
260198	Grapple for biomass GO-022B with rotator GR463 and Joint	
260190	Grapple for biomass GO-022B with rotator GR463 and Joint incl. brake	
260196	Grapple for biomass GO-026B with rotator GR463 and Joint	
260197	Grapple for biomass GO-026B with rotator GR463 and Joint incl. brake	
261268	Grapple for biomass GO-022B with rotator GR463 and Joint	✔
261265	Grapple for biomass GO-022B with rotator GR463 and Joint incl. brake	✔
261266	Grapple for biomass GO-026B with rotator GR463 and Joint	✔
261267	Grapple for biomass GO-026B with rotator GR463 and Joint incl. brake	✔
241409	Grapple GO-022	✔
238667	Grapple GO-026X	✔
257815	Grapple for biomass GO-022B	✔
252022	Grapple for biomass GO-026B	✔
513074	Joint incl. brake	✔
511749	4.5 t / 9920 lbs rotator GR463	✔
258143	4.5 t / 9920 lbs rotator GR46 (allowing Quick-Change Grapples)	✔
258311	4.5 t / 9920 lbs rotator GR46 (allowing Quick-Change Grapples) with adapter	✔
263969	Oil cooler MEH DOT 40K incl. Toolbox	✔
263979	Oil cooler MEH / ON-OFF DOT 40K incl. Toolbox	✔
250931	Oil cooler MEH / ON-OFF DOT 50K / DOT 55K incl. Toolbox	
263957	Oil cooler MEH / ON-OFF 3,1 m, DOT 50K / DOT 55K incl. Toolbox	
263997	Oil cooler MEH / ON-OFF 4,5 m, DOT 50K / DOT 55K incl. Toolbox	
244414	Oil cooler DOT 50K / DOT 55K Danfoss	
255776	Oil cooler DOT 50K / DOT 55K incl. seat	
253229	Oil cooler DOT 50ZK	
263983	Oil cooler MEH ON-OFF 3,1 m, DOT 50ZK	
253227	Oil cooler MEH ON-OFF 4,5 m, DOT 50ZK	
263984	Oil cooler DOT 50ZK Danfoss	
255780	Oil cooler DOT 50ZK incl. seat	
247088	Toolbox - depending on crane equipment	✔
257426	Swingarm-mounted Lights DOT 40K, DOT 45K, DOT 50K, DOT 55K, DOT 95K	✔
257427	Swingarm-mounted Lights DOT 50ZK	
263987	Chainsaw and fuel container holder	✔
265763	Chainsaw and fuel container holder	
VD15	Winch for DOT cranes VD 15	✔
VD19	Winch for DOT cranes VD 19	

DOT 45K	DOT 50K	DOT 55K 85	DOT 50ZK	DOT 95K
		✓		
			✓	
✓ (not possible with 260357)	✓	✓	✓	
✓ (not possible with 260357)	✓	✓	✓	
✓	✓	✓	✓	
✓ (not possible with 260357)	✓	✓	✓	
✓	✓	✓	✓	
✓ (not possible with 260357)	✓	✓	✓	
✓ (with 260357)	✓	✓	✓	
✓ (with 262520)	✓	✓	✓	
✓				
✓				
✓				
✓				
	✓	✓	✓	✓
	✓	✓	✓	✓
	✓	✓	✓	✓
	✓	✓	✓	✓
	✓	✓	✓	✓
	✓	✓	✓	✓
	✓	✓	✓	✓
	✓	✓	✓	✓
✓				
✓				
✓				
✓				
✓	✓	✓	✓	✓
✓	✓	✓	✓	✓
✓	✓	✓	✓	✓
✓	✓	✓	✓	✓
✓	✓	✓	✓	✓
✓	✓	✓	✓	✓
✓	✓	✓	✓	✓
✓	✓	✓	✓	✓
✓				
✓				
	✓	✓		
	✓	✓		
	✓	✓		
	✓	✓		
	✓	✓		
			✓	
			✓	
			✓	
			✓	
			✓	
✓	✓	✓	✓	
✓	✓	✓		✓
			✓	
✓	✓	✓	✓	
				✓
✓				
	✓	✓	✓	✓

CONTROL OPTIONS

Mechanical control

two lever EURO control

with 2 electric ON-OFF valves

Electro-proportional hydraulic control

8-section electro-proportional hydraulic valve allows precise control. Available with various control consoles:

Electro-proportional control Danfos with console and 2 joysticks

electro-proportional control Danfoss with 2 separate joysticks or

electro-proportional control Danfoss with radio remote control Scanreco.

WINCHES FOR DOT CRANES

VD 19 and VD 15

To pull logs within the crane's reach.

NEW

Winch for DOT cranes	VD 15	VD 19
Pulling power	15 kN / 3400 lbs	18.7 kN / 4000 lbs
Pulling rope speed	0.7–1.1 m/s / 2.3'/s–3.6'/s	0.7–1.1 m/s / 2.3'/s–3.6'/s
Wire rope feeding speed	0.7–1.1 m/s / 2.3'/s–3.6'/s	0.7–1.1 m/s / 2.3'/s–3.6'/s
Operating pressure (Max.)	125 bar / 1810 psi	155 bar / 2250 psi
Functions	Pulling / Feeding / Free rope unwinding	Pulling / Feeding / Free rope unwinding
Wire or synthetic rope diameter	6 mm / 0.24"	6 mm / 0.24"
Pulling rope length (drum capacity)	38 m / 125'	38 m / 125'
Weight (without the pulling rope)	32 kg / 70.5 lbs	32 kg / 70.5 lbs
Control	Radio remote control	Radio remote control

Control options for DOT 95K

Only the best for our forestry cranes - systems for forestry machines. Quality at the highest level!

NEW

- The electro-proportional controls are independent of the valve, making them suitable for all PWM valves.
- All system variants operate independently of each other but share the same base.

A9 Radio remote control HBC PROFI Control

This remote control is characterized by perfect handling and optimal user-friendliness.
The absolute professional system for maximum flexibility.

- Control from a distance of 100-120 meters.
- 8 functions: lifting arm, slewing gear, swingarm, telescope, rotator, grapple, support 1+2.
- Additional function for winch control.

A9

K1 Cabin control with joystick

- The K1 has 3 speed levels that can be set on the control housing: swiveling the crane left and right.
- Larger joysticks are also available as an alternative.

K1

K2

K2 Controle console

- The K2 has three speeds that can be set using a toggle switch according to your preference
- Durable aluminum housing
- Protection Class IP65

Spider

- 9 x double-acting
- 1 x for LED light
- 1 x cable with 3-pin plug for power supply

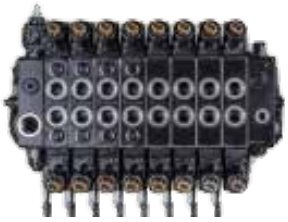

Valve technology

- FLOW SHARING valves (120 l/min)
- Load-independent control of consumers through pressure balance technology
- For constant pump as well as for LS pump
- Slides and protections tailored to forestry cranes

GRAPPLES TAJFUN

Fast, smooth and efficient work

Grapples for logs
GO-022 and GO-026X

Grapples for biomass
GO-022B and GO-026B

A 4.5 t / 9920 lbs rotator GR463 with endless rotation provides high capability.

A 4.5 t / 9920 lbs rotator GR46 enables quick replacement of grapples. With endless rotation provides high capability.

	GO-022	GO-026X	GO-022B	GO-026B
Weight	100 kg / 220.5 lbs	155 kg / 341.7 lbs	105 kg / 231.5 lbs	180 kg / 396.8 lbs
Load	30 kN / 6500 lbs	40 kN / 9000 lbs	30 kN / 6500 lbs	40 kN / 9000 lbs
Clamping force with open grapple 21 Mpa	10 kN / 2300 lbs	10 kN / 2300 lbs	10 kN / 2300 lbs	10 kN / 2300 lbs
Clamping force with semi-open grapple 21 Mpa	12,5 kN / 2.800 lbs	14 kN / 3000 lbs	12,5 kN / 2.800 lbs	14 kN / 3000 lbs
Operating pressure	21 Mpa / 3046 psi	21 Mpa / 3046 psi	21 Mpa / 3046 psi	21 Mpa / 3046 psi

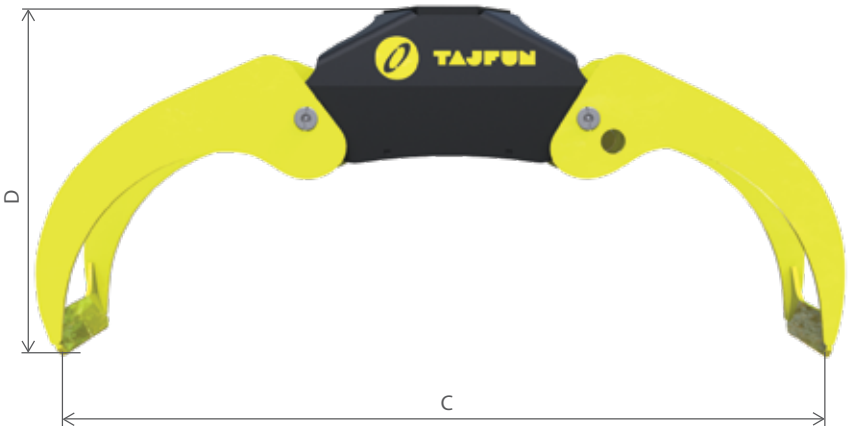

BR1 Joint incl. brake

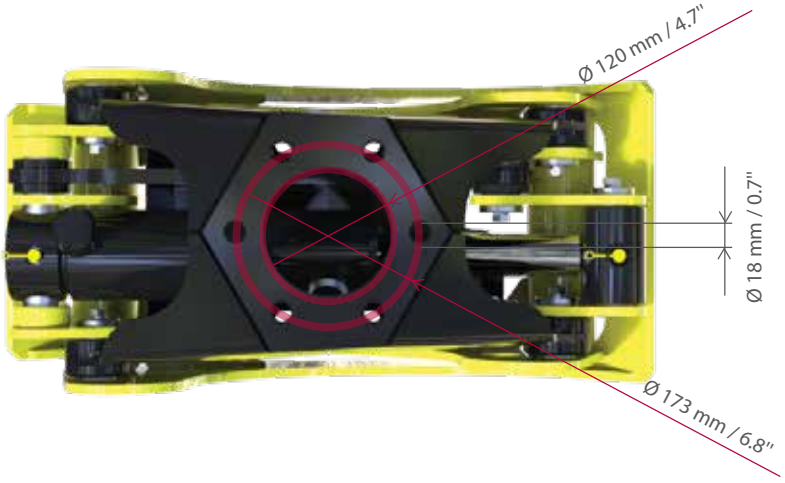

	GO-022	GO-026X	GO-022B	GO-026B
A_{nom}	0,22 m² / 2.4 ft²	0,26 m² / 2.8 ft²	0,22 m² / 2.4 ft²	0,26 m² / 2.8 ft²
B	741 mm / 29.2"	877 mm / 34.5"	741 mm / 29"	877 mm / 34.5"
C	1300 mm / 51"	1509 mm / 59.5"	1313 mm / 51.7"	1518 mm / 59.4"
D	600 mm / 23.6"	726 mm / 28.6"	585 mm / 23"	694 mm / 27.3"
E	70 mm / 2.8"	85 mm / 3.3"	70 mm / 2.8"	85 mm / 3.3"
F	696 mm / 27.4"	820 mm / 32.3"	672.8 mm / 26.5"	788.7 mm / 31"
G	436 mm / 17"	520 mm / 20.5"	436 mm / 17.2"	517 mm / 20.4"
H	323 mm / 12.7"	400 mm / 15.7"	343 mm / 13.5"	416 mm / 16.4"
I	278 mm / 11"	323 mm / 12.7"	278 mm / 11"	336 mm / 13.2"

FORESTRY TRAILERS - GAP

Intended for daily use by professionals, as well as for personal use by individuals.

The Tajfun forestry trailers, established under the GAP brand name, are designed for the safe and rapid transportation of raw or treated timber The complete manipulation of raw wood materials is enabled in combination with the built-in Tajfun DOT hydraulic crane.

GREAT PERFORMANCE

included standard equipment

Forestry trailers Tajfun are also available in combination with selected hydraulic crane DOT.

BOLSTERS

GAP 110 and GAP 140 have 5 pairs of bolsters that prevent the load from falling. The total height of the bolsters is 1420 mm / 55.9". GAP 90 has 3 pairs of bolsters with a total height of 1400 mm / 55". Option to purchase additional bolsters.

BRAKES

Forestry Trailer standard equipment includes hydraulic brakes on 4 wheels. Also available as two-line system. Hydraulic brakes can be replaced with air brakes on 4 wheels. Different options are available listed on page 70. For GAP 90, an overrun brake is also available.

Air brakes

Hydraulic brakes

WHEELS

(tires and rims with valve protection) can also be fitted with inner tubes. Different dimensions are available (listed on page 68). On the GAP 90 and GAP 110, each wheel is attached with 6 screws, on the GAP 140 it is attached with 8 screws.

COUPLINGS

The GAP 90, GAP 110 or GAP 140 Forestry Trailer standard equipment **includes a Ø 40** mm / 1.6" coupling. Depending on the tractor, other models or dimensions of the coupling are available.

Coupling normal Ø 50 mm / 2"

Coupling normal Ø 40 mm / 1.6" 2T

Ball Coupling K80

Coupling swivel Ø 50 mm / 2"

There are pumps available intended for fixed mounting on your forestry trailer, which differ depending on the type of connection.

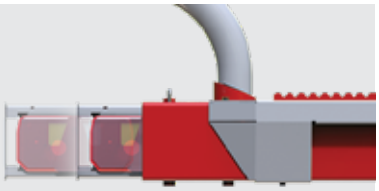

The forestry trailer has signaling lights as standard equipment. They can be protected and stored within the extension of the loading area.

Hydraulic steering with two hydraulic cylinders. The drawbar angle is +/–40°. (at GAP 90 +/–30°).

BLACK BRUIN DRIVE

The Tajfun GAP 140 Forestry Trailers are optionally driven by the famous Black Bruin Drive Systems. The on-demand Black Bruin Drive System stands for a complete portable solution allowing for the smooth operation of tractor driven trailers and work equipment. It is designed for activities that often require effective traction in difficult circumstances. By its additional grip, the work season is prolonged and work can be done in conditions where work stoppage would otherwise be required.

BLACK BRUIN HYDRAULIC MOTOR

VALVE

MONITORING DEVICE

STEERING SYSTEM INCL. SCREEN

1. A steep slope **uphill**

2. A steep slope **downhill reverse**

Typical situations – Driving Mode

3. Over obstacles

4. On **slippery** and **sinking** terrain.

DRIVING RELIABLY EVEN IN THE TOUGHEST CONDITIONS!

In Driving Mode, the operator can select the travel direction and the level of traction, which both can be adapted to the driving conditions (the power level remaining the same even when the driving speed changes).

EXTENSION OF THE LOADING AREA

The GAP 90, GAP 110 and GAP 140 Forestry Trailer standard equipment includes a mechanical extension of loading area, which can be replaced by a hydraulic one (GAP 110 and GAP 140).

GAP 90

Gross weight	9000 kg / 19842 lbs
Load Capacity (without crane)	~ 7100 kg / ~ 15653 lbs
Own weight	~ 1900 kg / ~ 4189 lbs
Tires	400/60–15.5 14PR (6 screws)
Base frame / Chassis	180 x 180 x 6 mm / 7.1" x 7.1" x 0.2"
Bolsters	3 pairs (possibility to buy additional bolsters)
Total height of bolsters	1405 mm / 4’7"
Bolster diameter external / internal / thickness	~ 90 / 74 / 8 mm / ~3.5" / 2.9" / 0.3"
Length of loading area; Standard loading area extension	~ 3998–4618 mm / ~13’1 1/2”–15’2"
Height of coupling (from the ground)	Lower drawbar: ~ 490 mm / ~ 1’7"
	Upper drawbar: ~ 837 mm / ~ 2’9"
Length x width; Standard loading area extension (With standard tires)	~ 6157–6777 x 2085 mm / ~ 20’2 1/2”–22’3" x 6’10"
Hydraulic steering	Hydraulic guiding 2x cylinder
Drawbar angle	+/–30°
Working pressure	max. 180 bar / 2610 psi
Drive requirements	80 HP / 3,5 t / 7716.2 lbs

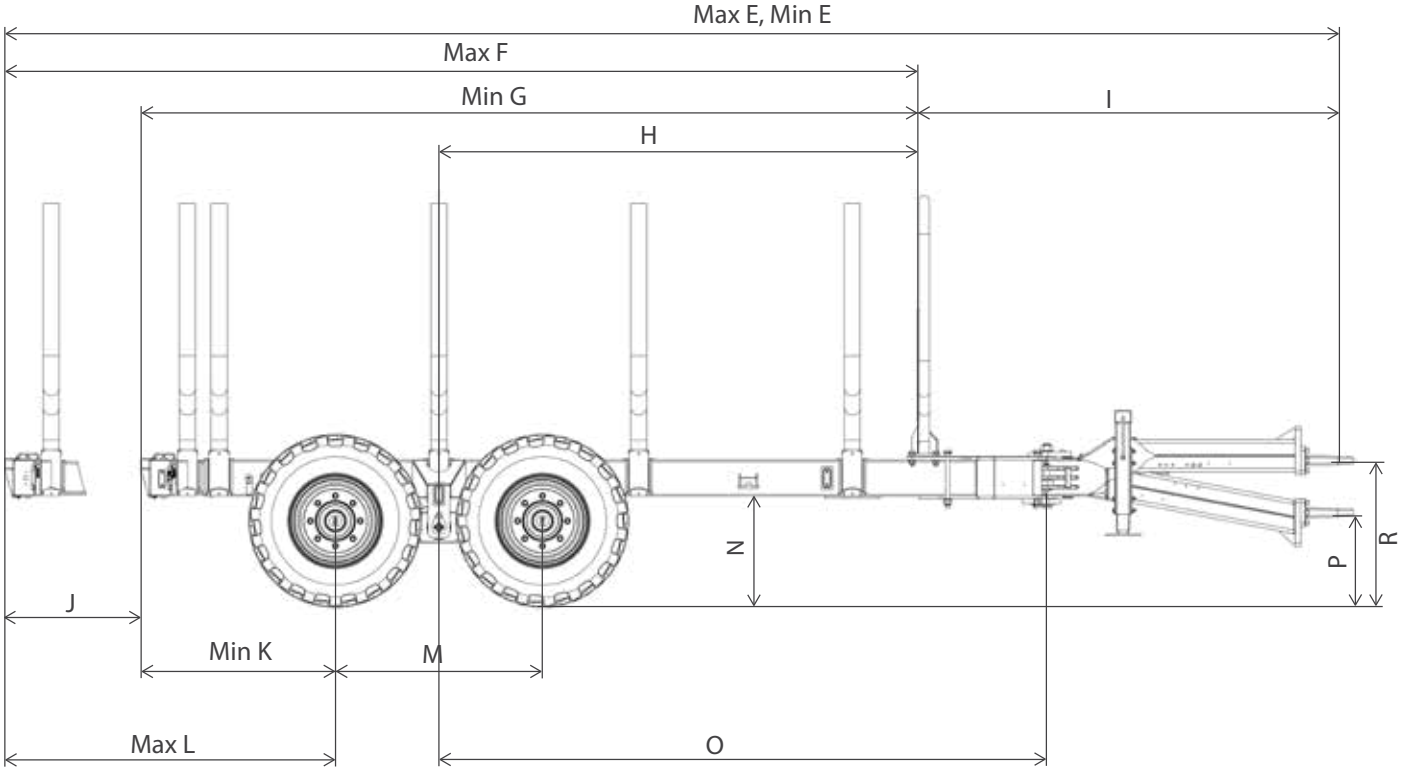

GAP 110	GAP 140
11000 kg / 24251 lbs	14000 kg / 30865 lbs
~ 8640 kg / ~ 19048 lbs	~ 11490 kg / ~ 25331 lbs
~ 2360 kg / ~ 5203 lbs	~ 2510 kg / ~ 5534 lbs
400/60–15.5/14PR	500/50–17/18PR
200 x 100 x 8 mm / 7.9" x 3.9" x 0.3"	200 x 100 x 8 mm / 7.9" x 3.9" x 0.3"
5 pairs	5 pairs
1410 mm / 4' 7.5"	1410 mm / 4' 7.5"
~ 90 / 74 / 8 mm / ~3.5" / 2.9" / 0.3"	~ 90 / 74 / 8 mm / ~ 3.5"/2.9"/0.3"
~ 4281–5033 mm / ~14' 0.5"–16' 6"	~ 4281–5031 mm / ~ 14' 0.5"–16' 6"
Lower drawbar: ~ 360 / 470 mm / ~1' 2" / 1' 6.5"	Lower drawbar: ~ 390/ 500 mm / ~ 1' 3" / 1' 8"
Upper drawbar: ~ 760 / 870 mm / ~2' 6" / 2' 10"	Upper drawbar: ~ 790 / 900 mm / ~ 2' 7" / 2' 11.5"
~ 6630–7382 x 2198 mm / ~ 21' 9"–24' 2.5" x 7' 2.5"	~ 6629–7379 x 2397 mm / ~ 21' 9"–24' 0.5" x 7' 9.5"
Hydraulic guiding 2x cylinder	Hydraulic guiding 2x cylinder
+/–40°	+/–40°
max. 210 bar / max. 3045 psi	max. 210 bar / max. 3045 psi
80 HP / 3,5 t / 7716.2 lbs	100 HP / 4 t / 8818.5 lbs

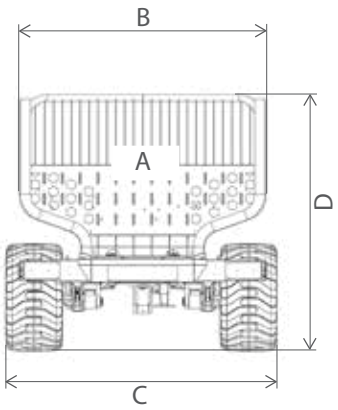

	GAP 90	GAP 110	GAP 140
A	2,3 m^2 / 24.8 ft^2	2,3 m^2/ 24.8 ft^2	2,5 m^2/ 27 ft^2
B	2085 mm / 6' 10"	2079 mm / 6' 10"	2179 mm / 7' 2"
C	2010 mm / 6' 7"	2198 mm / 7' 2.5"	2397 mm / 7' 9 1/2"
D	2232 mm / 7' 4"	2215 mm / 7' 3"	2262 mm / 7' 5"
Max E	6777 mm / 22' 3"	7382 mm / 24' 2.5"	7379 mm / 24' 2 1/2"
Min E	6157 mm / 20' 2 1/2"	6630 mm / 21' 9"	6629 mm / 21' 9"
Max F	4618 mm / 15' 2"	5033 mm / 16' 6.1"	5031 mm / 16' 6"
Min G	3998 mm / 13' 1 1/2"	4281 mm / 14' 0.5"	4281 mm / 14' 0.5"
H	2606 mm / 8' 6 1/2"	2640 mm / 8' 8"	2640 mm / 8' 8"
I	2159 mm / 7' 1"	2349 mm / 7' 8"	2349 mm / 7' 8"
J	620 mm / 2' 1/2"	752 mm / 2' 6"	750 mm / 2' 5.5"
Min K	866 mm / 2' 10"	1067 mm / 3' 6"	1071 mm / 3' 6.2"
Max L	1486 mm / 4' 10.5"	1818 mm / 5' 11.6"	1821 mm / 5' 11.7"
M	1090 mm / 3' 7"	1150 mm / 3' 9"	1140 mm / 3' 9"
N	538 mm / 1' 9"	562 mm / 1' 10"	610 mm / 2'
O	3171 mm / 10' 5"	3345 mm / 10' 11 1/2"	3345 mm / 10' 11 1/2"
P	490 mm / 1' 7"	360 mm / 1' 2"	500 mm / 1' 8"
R	837 mm / 2' 9"	760 mm / 2' 6"	786 mm / 2' 11.5."

GAP 90 and GAP 110: Wheels (tire, rim and valve protection) 400/60-15.5/14PR
GAP 140: Wheels (tire, rim and valve protection) 500/50-17/18PR

GAP ACCESSORIES

Compatibility

Article number	Description
249879	Wheels (tire, rim and valve protection) 400/60-15.5/14PR, ET-0
257915	Wheels (tire, rim, inner tube and valve protection) 400/60-15/14PR, ET-0
249856	Wheels (tire, rim and valve protection) 400/60-15.5/18PR, ET-0
257916	Wheels (tire, rim, inner tube and valve protection) 400/60-15/18PR, ET-15
249851	Wheels (tire, rim and valve protection) 480/45-17/18PR AW708, ET-0
257608	Wheels (tire, rim, inner tube and valve protection) 480/45-17/18PR AW708, ET-0
257613	Wheels (tire, rim and valve protection) 500/50-17/14PR, ET-0
257450	Wheels (tire, rim, inner tube and valve protection) 500/50-17/14PR, ET-0
249858	Wheels (tire, rim and valve protection) 500/50-17/18PR, ET-0
257152	Wheels (tire, rim, inner tube and valve protection) 500/50-17/18PR, ET-0
249873	Wheels (tire, rim and valve protection) 500/50-17/18PR,ET-0
257325	Wheels (tire, rim, inner tube and valve protection) 500/50-17/18PR, ET-0
249876	Wheels (tire, rim and valve protection) 505/50-17/18PR, ET-35 (with BB drive)
264284	Axles with hydraulic brakes 4x, two-line system
264286	Axles with hydraulic brakes 4x, single line system
264287	Axles with air brakes 4x
264288	Axles with hydraulic brakes 2x, single line system
264290	Axles with air brakes 2x
262395	Axles with overrun brake
262406	Hydraulic brakes 2x, single line system (for overrun brake)
262411	Air brakes 2x, single line system (for overrun brake)
262411	Axles without brakes
264299	Axles with hydraulic brakes 4x, two-line system
264296	Axles with hydraulic brakes 4x, single line system
264298	Axles with air brakes 4x
264300	Axles with hydraulic brakes 2x, single line system
264301	Axles with hydraulic brakes 2x
264302	Axles without brakes
264305	Axles with hydraulic brakes 4x, two-line system
264303	Axles with hydraulic brakes 4x, single line system
264304	Axles with air brakes 4x
264306	Axles with hydraulic brakes 2x, single line system
264307	Axles with air brakes 2x
257947	Axles with Black Bruin Drive 2 wheel-drive B250
261823	Hydraulic brakes 4x, two-line system (BB Drive)
257976	Hydraulic brakes 4x, single line system (BB Drive)
257984	Axles with air brakes 4x (BB Drive)
264311	Axles without brakes
249878	Extension of the loading area
249872	Hydraulic pull-out extension of the loading area
249884	Extension of the loading area
249885	Hydraulic pull-out extension of the loading area
249883	Coupling standard Ø 40 mm / 1.6"
257571	Coupling standard Ø 40 mm 2T / 1.6"
255154	Coupling standard Ø 50 mm / 2"
249870	Swivel coupling Ø 50 mm / 2"
249869	Ball coupling K80

GAP 90	GAP 110	GAP 140
✓	✓	
✓	✓	
✓	✓	
✓	✓	
✓	✓	
✓	✓	
✓	✓	
✓	✓	
✓	✓	
✓	✓	
		✓
		✓
		✓
✓		
✓		
✓		
✓		
✓		
✓		
✓		
✓		
✓		
	✓	
	✓	
	✓	
	✓	
	✓	
	✓	
		✓
		✓
		✓
		✓
		✓
		✓
		✓
		✓
		✓
		✓
	✓	
	✓	
		✓
		✓
✓	✓	✓
✓	✓	✓
✓	✓	✓
✓	✓	✓
✓	✓	✓

Article number	Description
262333	Platform for the user for the upper coupling drawbar
254580	Platform for the user for the upper coupling drawbar
254615	Platform for the user for the lower coupling drawbar
262323	Platform holder for mechanical control
263942	Platform holder for joysticks control
263944	Platform holder for Scanreco control
250485	Platform holder for mechanical control; with 254580 and 254615
261703	Platform holder for joysticks control; with 254580 and 254615
259056	Platform holder for Scanreco control; with 254580 and 254615
262257	Upper coupling drawbar H64
254921	Upper coupling drawbar H60
262263	Upper coupling drawbar H64; overrun brake
262258	Lower coupling drawbar H64
254927	Lower coupling drawbar H60
262291	Pump for fixed forestry trailer mounting for the upper coupling drawbar
262337	Pump for fixed forestry trailer mounting for the lower coupling drawbar
254922	Pump for fixed forestry trailer mounting for the upper coupling drawbar
254930	Pump for fixed forestry trailer mounting for the lower coupling drawbar
258337	Pump for fixed forestry trailer mounting for the lower coupling drawbar BB drive
265686	Double pump with housing / forestry trailer (upper coupling); for DOT 95K
265687	Double pump with housing / forestry trailer (lower coupling); for DOT 95K
260371	Pair of bolsters with frame
249868	Pair of bolsters with holders for additional mounting
263891	Pair of holders for mounting additional bolsters
249866	Mudguard disassembly 400/60-15.5
249880	Mudguard disassembly 500/50-17
265682	Branch trough for GAP 90 / GAP 110 (4 m)
265683	Branch trough extension for GAP 110 (1 m)
265684	Branch trough for GAP 140 (4 m)
265685	Branch trough extension for GAP 140 (1 m)
DOT40K	Hydraulic crane with equipment DOT 40K
DOT45K	Hydraulic crane with equipment DOT 45K
DOT50K	Hydraulic crane with equipment DOT 50K
DOT55K	Hydraulic crane with equipment DOT 55K 85
DOT50ZK	Hydraulic crane with equipment DOT 50ZK
DOT95K	Hydraulic crane with equipment DOT 95K

GAP 90	GAP 110	GAP 140
✔		
	✔	✔
✔	✔	✔
✔ (with 262333)		
✔ (with 262333)		
✔ (with 262333)		
✔ (with 254615)	✔ (with 254580)	✔ (with 254580)
✔ (with 254615)	✔ (with 254580)	✔ (with 254580)
✔ (with 254615)	✔ (with 254580)	✔ (with 254580)
✔		
	✔	✔
✔		
✔		
	✔	✔
✔		
✔		
	✔	✔
	✔	✔
		✔
		✔
		✔
✔		
	✔	✔
	✔	✔
	✔	
	✔	✔
✔	✔	
	✔	
		✔
		✔
✔		
✔		
	✔	✔
	✔	✔
	✔	✔
		✔

BRANCH TROUGH,

suitable for GAP 110 and GAP 140

The forestry trailer is equipped with standard 5 pairs of bolsters to prevent the load (logs) from falling off the trailer. A branch trough is available for the safe transport of branches and small items of wood, and can be additionally mounted on the forestry trailer.

Branch trough for GAP 90 / GAP 110 / GAP 140	
Length x Width x Height	4000 x 1893 / 1993 x 1400 mm 157.5" x 74.53" / 78.46" x 55.1"
Weight	456 kg / 1005.3 lbs

BOLSTERS

A standard equipment (basic configuration) forestry trailer Tajfun has 3 pairs of bolsters (GAP 90) or 5 pair of bolsters (GAP 110 and GAP 140).

For additional protection of the load or in case of possible damage to the bolsters on your trailer, additional pair of bolsters is available as accessories.

	Bolsters – pair GAP 90	Bolsters – pair GAP 110, GAP 140
Total height	1420 mm (1000 mm - only bolsters) 55.9" (39.4" - only bolsters)	1420 mm / 55.9"
External diameter	Ø ~88 mm / 3.4"	Ø ~90 mm / 3.5"
Internal diameter	Ø 72.9 mm / 2.9"	Ø 72.9 mm / 2.9"
Bolsters wall thickness	8 mm / 0.3'	8 mm / 0.3'

MUDGUARD

is suitable for use with 500/50-17 and 400/60-15.5 tyres.

It can be quickly and easily installed on the Forestry Trailer (on GAP 110 with 6 screws, on GAP 140 with 8 screws). It is made of durable quality plastic and takes care of the safety of other road users.

PLATFORM FOR THE USER

Safe and transparent operating

of hydraulic tractor crane when while loading the forestry trailer. Mounted on a forestry trailer.

	Platform for the user for the upper coupling drawbar	Platform for the user for the upper lower coupling drawbar
Length x Width x Height	716 x 614 x 1355 mm 28.2'' x 24.2'' x 53.3''	879 x 609 x 1459 mm 34.6'' x 24'' x 57.4''
Weight	59 kg /130 lbs	65 kg / 143.3 lbs

FORESTRY INFORMATION SYSTEM

PROFESSIONAL USE IN FORESTRY AND WOOD INDUSTRY

The system consists of an Electronic Digital Caliper and advanced associated software. The main features of the system are: integrated wireless technology, high mechanical resistance, easy to use, direct digitalization of measured data.

USE OF FORESTRY INFORMATION SYSTEM TAJFUN

The most common concrete examples of using the entire system are:

- purchase - sale of logs,
- log control,
- cut wood,
- forest inventory.

TAJFUN BOB 800

Electronic digital caliper

- Integrated wireless technology.
- High mechanical resistance standard: NEMA-4.
- High mechanical protection IP67 that enables measuring in different weather conditions (sun, snow, rain); lightweight, durable and ergonomic design is easy to use and enables easier maneuvering on tight measurement points.
- Easy-to-use and high performance software for data processing (no computing skills needed).
- Digital and mechanical display of diameter value.
- Enables extremely fast measuring.
- Direct transformation of measured data into a digital form which makes it an excellent supplement to forestry machinery.
- Optional log length measurement.
- Selection of types and quality via the diameter button.
- AAA batteries that can be quickly changed in the field.

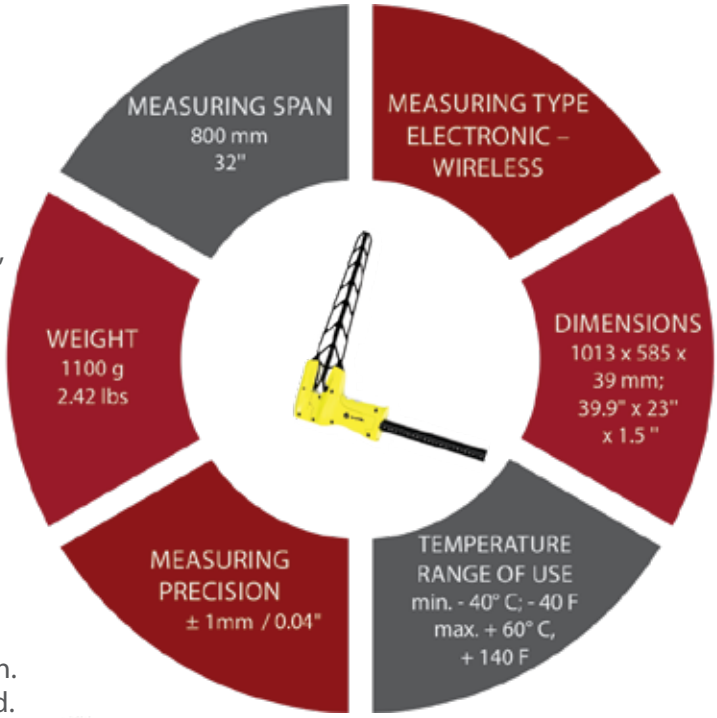

BOB Accessories	BOB 800 caliper case	Mobile device holder	Mobile printer V-Line 112
Article number	512326	517166	511681

TAJFUN MX BOB,

A modern and innovative software for Android mobile devices (phones, PDAs, tablet computers, ...)

that together with the forest caliper enables reading, recording, editing, and printing of acquired data from measuring the forest wood assortments (trees, logs and boards). It is designed for individual forest owners, owners of small sawmills and professional users – foresters and wood-handling professionals. Software Tajfun MX BOB communicates wireless with other devices that are necessary for smooth work in a forest (electronic caliper Tajfun BOB 800, portable printers, …).

SET TAJFUN MX BOB BASIC

Electronic digital caliper Tajfun BOB 800 and Tajfun MX BOB basic software

- It meets the requirements of the legislation regarding mandatory transport or bookkeeping documents for the transport of forest and wood assortments (bill of receipt, delivery note, bookkeeping document)
- »OFF-LINE« operation without data transfer - Internet connection

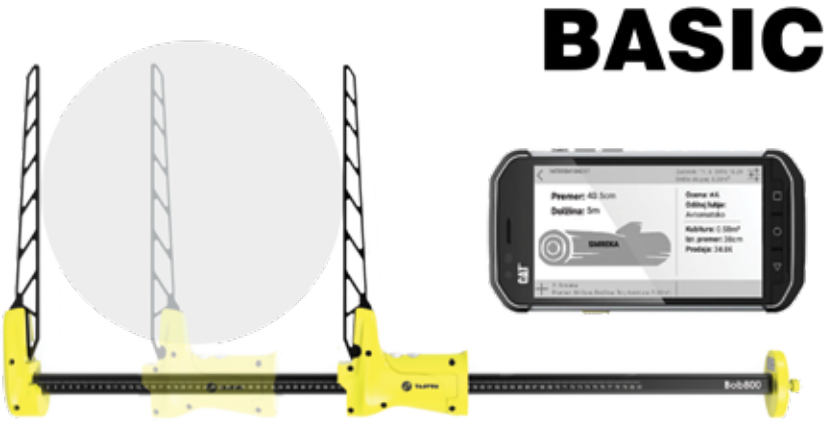

FUNCTIONS Tajfun MX BOB basic:

- Log measurements (diameter, length, quality, bark, ID, tree species)
- Boards measurements (length, width, height, quality, quantity, ID, tree species)
- Standing trees measurements (diameter, height, quality, ID, tree species)
- Measurement of log defects
- Automatic bark removal
- Mixed wood material measurements – wood chips, pellets, sticks, logs, boards (volume, weight input, quality, tree species)
- Data export into PDF or Excel files and printing (V-Line, zebra, pos and other mobile printers)
- Input of basic information and any articles into the document (customer, seller, transporter, ...)

AUSTRIA
SOMMERSGUTER GmbH; Fischbach 3, A-8654 Fischbach,Osterreich;
P: +43 3170 225; **F:** +43 3170 2254; **E:** info@soma.at; **W:** www.soma.at

BOSNIA AND HERZEGOVINA
MILAGRO D.O.O., Ul. Vukosavačka br.4, BIH-76100 Brčko distrikt, Bosna i Hercegovina
P: +387 65 403 853; **M:** +387 65 339 929; **E:** info@milagro.ba; **W:** www.milagro.ba

BELGIUM
B.G. Mat, Route Charlemagne,33, Z.I.Baileux, 6460 Chimay , Belgium/Belgique
P: +32 60 21 90 21; **F:** +32 60 21 90 96; **M:** +32 495 24 03 03; **E:** info@bgmat.be; **W:** www.bgmat.net

BELARUS
ЧУП "ГИДРОСКАН"; Белоруссия 220073, г. Минск ул.Ольшевского,10, офис 326-328;
P/F: +375 17 2043045; **M:** +375 29 6764154; **E:** gidroscan@gmail.com; **W:** www.chup-gidroskan.deal.by

BULGARIA
FOREST STYLE LTD; General Stoletov str. 42, office 9, BG-6000 Stara Zagora, Bulgaria
P: +359 42 230 608; **F:** +359 42 649 911; **M:** +359 888 700 410; **E:** contact@forest-online.bg;
W: www.forest-online.bg

CANADA - EAST (QUEBEC, ONTARIO, NEW BRUNSWICK, NOVA SCOTIA,PRINCE EDWARD ISLAND, NEW FOUNLAND AND LABRADOR)
INDUSTRIES RENAUD GRAVEL INC.; 71, Chemin St-Gabriel, St-Cleophas-de-Brandon (Quebec), J0K 2N0, Canada
P: +1 450 889 2794; **F:** +1 450 889 8103; **E:** info@ind-gravel.com; **W:** www.indgravel.com

CANADA - WEST (BRITISH COLUMBIA, ALBERTA, SESKATCHEWAN, MANITOBA)
BIG BEAR SERVICES; RR1,T0M 0W0 Didsbury, Alberta
M: +1 403 638-6763; **E:** bubbabert@telus.net

CZECH REPUBLIC
AGAMA A.S.; Huštenovska 2001, CZ-686 03 Stare Mesto, Ceska Republika;
P: +420 572 541 701; **F:** +420 572 541 702; **E:** agama@agama-as.cz; **W:** www.agama-as.cz

CHILE
MVL REPRESENTACIONES LTDA.; Camino a Coronel Km 10, Megacentro Bodega 1B, CL-3349001 Concepcion, Chile
P: +56 41 2469238; **F:** + 56 41 2469239; **M:** +56 994504320; **E:** mvl@mvl.cl; **W:** www.mvl.cl

CROATIA
G.T.P. ŠOŠTARIĆ; Novaki petrovinski 6a, HR-10450 Jastrebarsko, Hrvatska
P: +385 1 6272 700; **F:** +385 1 6273 176; **E:** info@gtpsostaric.com; **W:** www.gtpsostaric.com

GRAPAK D.O.O.; Mavra Schlengera 5, Gornji Kneginec, HR-42204 Turčin, Hrvatska
P: +385 42 209 236; **F:** +385 42 209 237; **M:** +385 99 69 88 290; **E:** prodaja@grapak.com; **W:** www.grapak.com

DENMARK
Serve Maskinimport Handelsfirmaet; Stolelyngen 18, DK - 3450 Allerod, Denmark
P: +45 702 35001; **F:** +45 7023 5002; **M:** +45 2176 5003; **E:** shs@serve.dk; **W:** www.servemaskiner.dk

FINLAND
VÖRÅ MASKIN OCH TRAKTOR; Rejpeltvägen 1, FI-66600 Vörå, Finland
P: +358 63 844 612; **M:** +358 50 527 65 88; **E:** vmt@vmt.fi **W:** www.vmt.fi

FRANCE
OCCAMAT SAS - IMPORTATEUR POUR LE SUD DE LA FRANCE; ZA Les Moliniéres, 12450 LA PRIMAUBE, France
P: +33 5 65 69 47 15; **F:** +33 5 65 69 78 13; **E:** contact.occamat@orange.fr; **W:** www.occamat.net

AMR - IMPORTATEUR POUR LE NORD DE LA FRANCE; 1 rue de l'Industrie, 67390 ELSENHEIM, France
P: +33 3 88 58 69 69; **F:** +33 3 88 58 69 70; **E:** info@a-m-r.fr; **W:** www.a-m-r.fr

GERMANY
UNTERREINER FORSTGERÄTE GmbH; Bahnweg 1-3, DE-84387 Julbach/Buch, Deutschland
P: +49 (0) 86 78 74 94 0; **F:** +49 (0) 86 78 74 94 111; **E:** info@unterreiner.eu; **W:** www.unterreiner.eu

ENGEL Forsttechnik; Abt. Meister-Straße 6, D-79780 Stühlingen-Lausheim, Deutschland
P: +49 (0) 77 09 92 250; **F:** +49 (0) 77 09 212; **E:** info@engel-forsttechnik.de; **W:** www.engel-forsttechnik.de

SCHEIFELE Forsttechnik GmbH; Schmalbachstr. 8, D-74626 Bretzfeld-Schwabbach , Deutschland
P: +49 (0) 79 46 92 00 11; **F:** +49 (0) 79 46 92 00 10; **E:** vertrieb@scheifele.de; **W:** www.scheifele.de

FEIGE FORSTTECHNIK GmbH; Gewerbepark Alte Ziegelei, Brüderstraße 4-6 , D-51588 Nuembrecht-Elsenroth, Deutschland
P: +49 (0) 22 93 90 89 50; **F:**+49 (0) 22 93 90 89 529; **E:** info@feige-forsttechnik.de; **W:** www.feige-forsttechnik.de

GREAT BRITAIN
KILWORTH MACHINERY LTD; Annwell Lane, Smisby, Ashby de la Zouch LE65 2TA, Great Britain
P: +44 1530 412 690; **F:** +44 1530 560 002; **E:** sales@kilworthmachinery.co.uk; **W:** www.kilworthmachinery.co.uk

GREECE
A. C. PAPADIMITRIOU; GR-61-100 Mandres, Kilkis, Ellas
P: +30 234 10 41869; **F:** +30 234 10 41869; **E:** bticorp@otenet.gr; **W:** www.papadimitriou-import.gr

HUNGARY
AGROTRACK 2000 Kft - for Eastern part; Rakoczi u. 14, HU-8971 Kerkabarabas, Magyarorszag
P: +36 92 374 515 ; 092 573 042; **F:** +36 92 573 043; **E:** agrotrack@axelero.hu; **W:** www.agrotrack2000.hu

AGROWOOD Kft for Western part; Szent Imre ut 83/a, HU-9028, Győr, Magyarorszag
P: +36 96 890 878 ; +36 30 960 4579 ; **F:** +36-96/900-219; **E:** info@faiparigepek.hu; **W:** www.faiparigepek.hu

ITALY
SCHWARZ GmbH/Srl; Boznerstraße/Via Bolzano 51, I-39057 Frangart/Frangarto (BZ), Italia
P: +390 471 633 133; **F:** +390 471 633 405; **E:** info@schwarz.it; **W:** www.schwarz.it

IRELAND
BREENS FARM MACHINERY LTD.; Freighduff, Cashel, Co.Tipperary; Ireland
P: +353 (0)62 61356; Gort Road, Ennis, Co. Clare; **P:** +353 (0)65 6841000; **W:** www.bfm.ie

KOSOVO
EVROSTIL EXPORT-IMPORT; Doveldžik bb, MK-7000 Bitola, Makedonija
P: +389 47 233-100; **F:** +389 47 236-100; **E:** info@evrostil.com.mk; **W:** www.evrostil.com.mk

LATVIA/LITHUANIA /ESTONIA
UAB Visa technika, Šiltnamių g. 61, Noreikiškės, LT-53363 Kauno r., Lietuva
P: +370 672 94577; **E:** info@visatechnika.eu

LUXEMBOURG
AGROTECHNIC Sàrl.; z.a. Schlammestee, L-9175 Niederfeulen, Luxembourg;
P: +352 812 731; **F:** +352 817 427; **E:** info@agrotechnic.lu; **W:** www.agrotechnic.lu

MACEDONIA
EVROSTIL EXPORT-IMPORT; Doveldžik bb, MK-7000 Bitola, Makedonija
P: +389 47 233-100; **F:** +389 47 236-100; **E:** info@evrostil.com.mk; **W:** www.evrostil.com.mk

MONTENEGRO
AGROAUTO d.o.o.; Ul. Bracana Bracanovića br. 78, ME-81105 Podgorica, Crna Gora
P: +382 69 349 396; **F:** +382 382 20 625 665; **E:** dogandzic@t-com.me; **W:** www.agro-auto.com

NETHERLANDS
de Wezel, Rijksweg 115, Dorst, Noord-Brabant, Nederland/Holland
P: +31 622 235 968; **E:** info@tajfun.nl; **W:** www.tajfun.nl

NORWAY
Krokkasser.no A/S, Fryavegen 80, 2630 Ringebu, Norge
P: +47 911 90 404; **E:** post@krokkasser.no; **W:** www.krokkasser.no

POLAND
STEKRO Sp. zoo Sp.k.; Brzezna 466,PL-33-386 Podegrodzie, Polska
P: +48 530 490 036; **E:** info@stekro.pl
W: www.stekro.pl

PORTUGAL
HITRAF Lda.; Lg. Moinhos – Marrancos, PT-4730-280 Vila Verde, Portugal;
P/F: +351 253 991 991; **M:** +351 968 026 118, +351 966 132 897;
E: hitraf.maquinas@gmail.com

PHILIPPINES
TRACTORCO COMPANY INC; Sitio Mambukog, Brgy. Zone 16, Talisay City, PH-6115 Negros Occidental, Pilipinas
P: +63 34 4952288; **F:** +63 9285030045; **W:** www.tractorco.net

ROMANIA
MAVI PROD; Str. Pandurilor nr74 ; 545300 Reghin, Romania
P: +40 265 512 504; **F:** +40 265 523 475; **E:** office@maviprod.ro; **W:** www.maviprod.ro

SLOVAKIA
UNIAGRO, S.R.O.; SNP 126, SK-962 01 Zvolenska Slatina, Slovensko
P: +421 917 147 944; **E:** info@uniagro.sk; **W:** www.uniagro.sk

SPAIN
AROZ-BERRI, S.A.; Ctra. N- 121 B, Km. 54, ES-31730 Irurita (Navarra), España
P: +34 948 58 10 21; **F:** +34 948 58 02 58; **E:** irurita@arozberri.com; **W:** www.arozberri.com

SWEDEN
MÖRE MASKINER AB; Verkstadsgatan 40, SE-392 39 Kalmar, Sverige
P: +46 480 883 01 or 05; **F:** +46 480 883 06; **E:** info@moremaskiner.se; **W:** www.moremaskiner.se

SWITZERLAND
UELI BALDINGER GmbH, Vogelsangstrasse 507, CH - 5426 Lengnau, Schweiz
P: +41 79 423 14 19; **E:** info@forst-landtechnik.ch; **W:** www.forst-landtechnik.ch

SOUTH AFRICA
HILL EQUIPMENT; 109 Victoria Road, ZA-3201 Pietermaritzburg, South Africa
P: +27 (0) 82 966 35 88, **F:** +27 (0)86 5177962, **M:** +27 (0)82 783 6170; **E:** info@hillequipment.co.za

SOUTH KOREA
FORMEC Co., Ltd., 59 Yongwon 3-gil, Seongnam-myeon, Dongnam-gu, Cheonan-si, Chungcheongnam-do, 31246 Republic of Korea
P: +82-41-555-9234; **F:** +82-41-522-9234; **M:** +82-10-3238-2262 **E:** flsrms@naver.com; **W:** www.formec.co.kr

TURKEY
DEMPO Diş Tiç. Ltd. Şti.; Aksinne Mah. Furgan Dede Cad.; Karagöz Sok. No:11/AMeram/Konya, Türkiye
P: +90 332 351 01 44; **F:** +90 332 351 21 44; **E:** dempo@dempogroup.com; **W:** www.dempogroup.com

UKRAINE
ООО "Д ЛАЙТ", Украина, 61202, г. Харьков, проспект Людвига Свободы, 29,
P: +38 (057) 720-11-57; **M:** +38 (050) 986-98-56; **E:** info@dlight.com.ua; **W:** www.dlight.com.ua

USA
OESCO, Inc.; P.O. Box 540, Route 116, Conway, MA 01341, Unated States
P: +1 800 634 55 57, +1 413 369 43 35; **F:** +1 413 369 44 31; **E:** info@oescoinc.com; **W:** www.oescoinc.com

TAJFUN REPRESENTATIVE OFFICES

BRASIL
TAJFUN DO BRASIL EQUIPAMENTOS FLORESTAIS LTDA; Rua Josè de Alencar 570,
Alto da XV - Cep: 80.045-115, Curitiba - Paraná, Brasil
P: +55 11 948 13 7023; **E:** info@tajfun.com.br; **W:** www.tajfun.com.br

RUSSIA
ООО «ТАЙФУН РУС»; Россия, 111123, г. Москва, ул. Плеханова, д. 4А, пом. XXXIV, ком. 17
P/F: +7 (495) 645 97 50; **M:** +7 926 456 48 23; **E:** info@tajfun.ru; **W:** www.tajfun.ru, тайфун.рф

SERBIA
TAJFUN RIS d.o.o.; Marije Bursać 5, RS-34000 Kragujevac, Srbija
P: +381(0) 62 8007 920; **E:** prodaja@tajfun.rs; **W:** www.tajfun.com

United States West Coast Importer and Tajfun's United States Representative Office
TAJFUN USA LLC, 8133 Chehalis Rd, Blaine, WA 98230, United States
P: +1 (425) 331 1062; **E:** tajfunusa@tajfun.com; **W:** www.tajfun.com, www.tajfunusa.com

TURKEY
Tajfun IST Makine San. Ve Tic. Ltd. Şti.; Adalet Mah. Manas Bulv. No:39; D: 3408 Bayraklı – İzmir; Türkiye
P: +90 (532) 673 82 62; **E:** enis.conku@tajfun.com; **W:** www.tajfun.com

TAJFUN®

Tajfun Planina d. o. o.
Planina pri Sevnici 41A
SI-3225 Planina pri Sevnici
Slovenija

+386 (0)3 746 44 00
export@tajfun.com
www.tajfun.com

Mechanization Tajfun

Find your language

Tajfun Planina d.o.o., valid from November 8th, 2024, we reserve the right to make any changes!